Slow diode vs Fast diode in Primary clamp of CCM Flyback

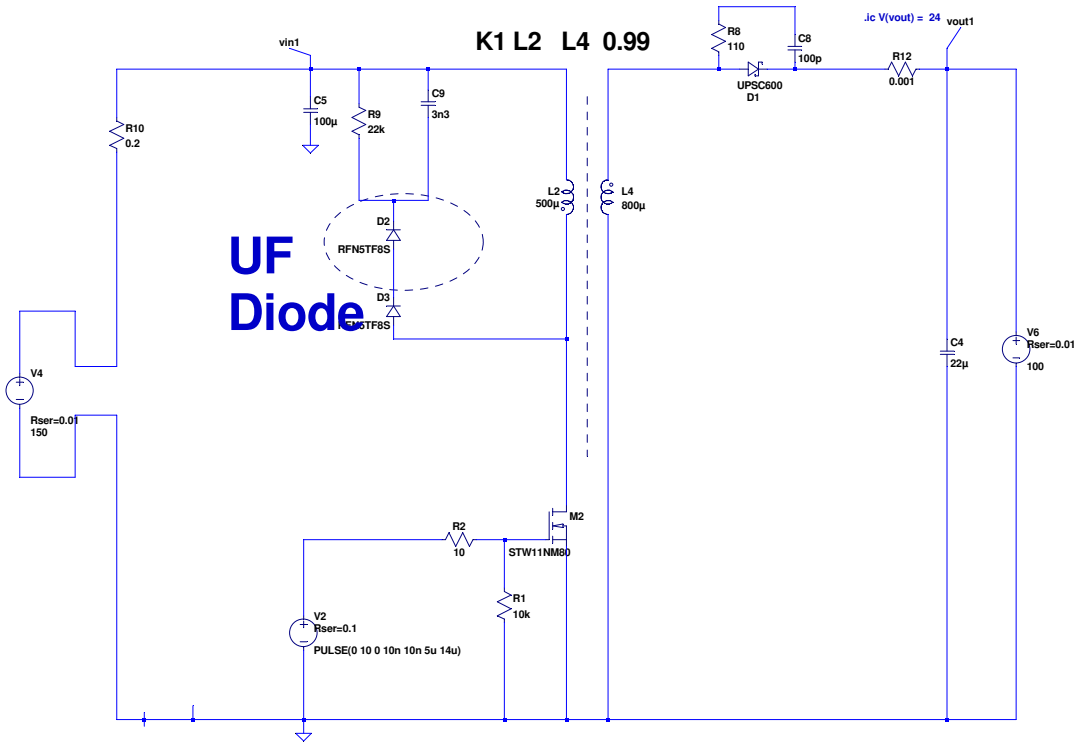

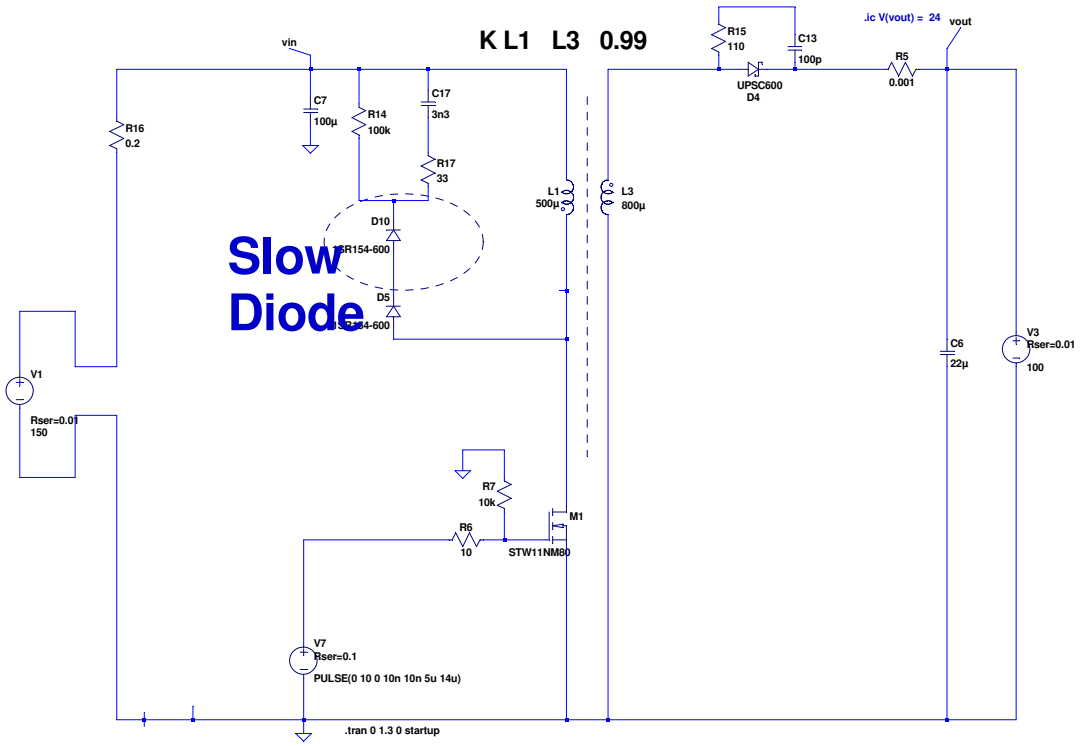

--- C:\forum\slow dioddd\Flyback primary clamp_ccm2.asc ---