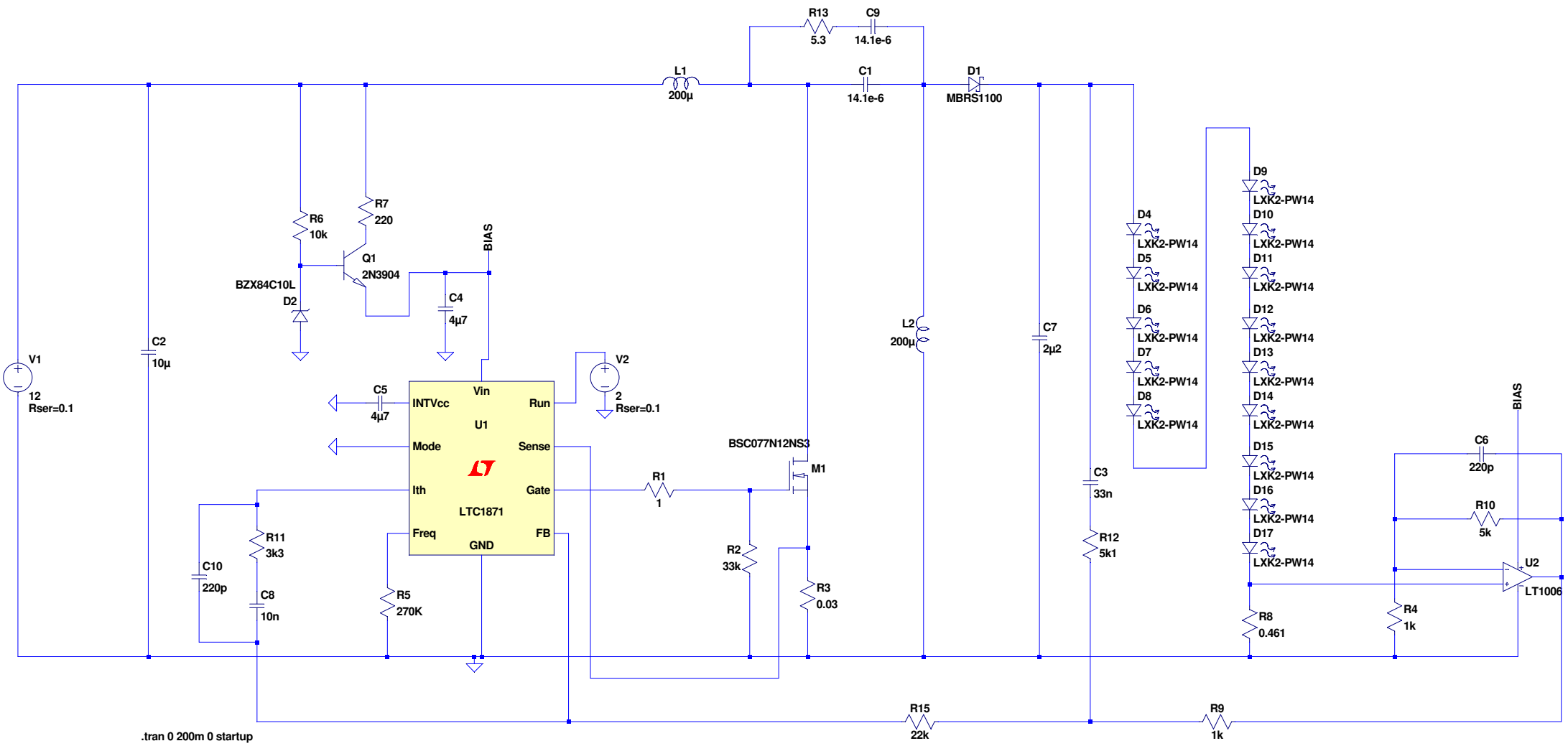

VOLTAGE ERROR AMPLIFIER CONNECTION.

--- C:\forum\SEPIC ERROR AMOPS\SEPIC 90K voltage error amp_1.asc ---