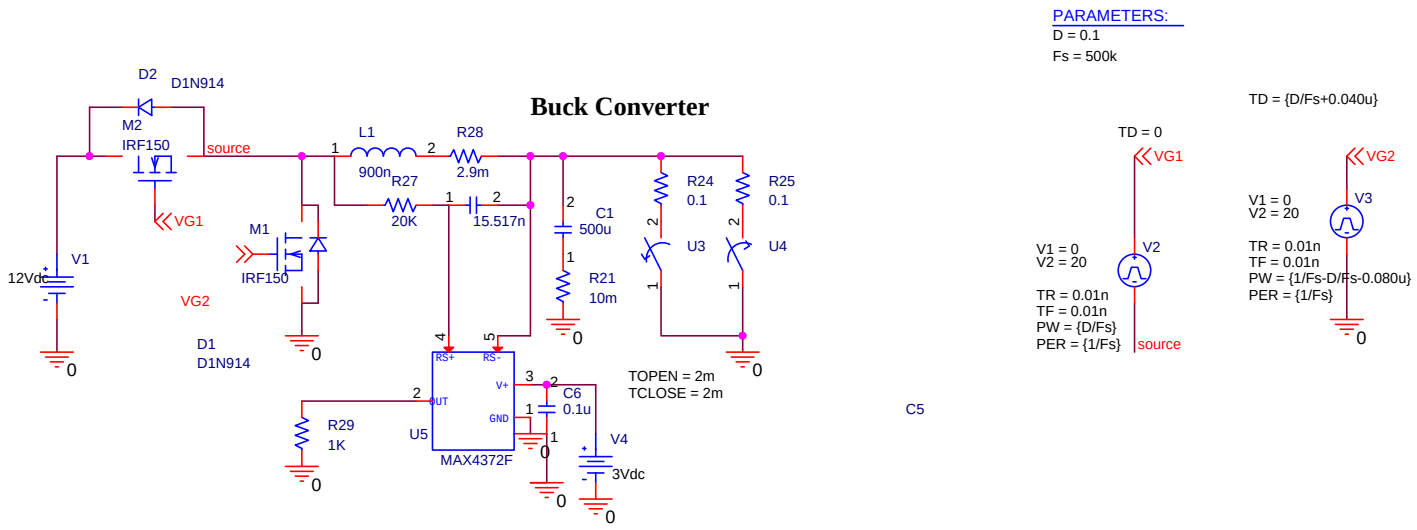

Title	<Title>	
Size A	Document Number <Doc>	Rev <RevCo
Date: Thursday, March 07, 2013	Sheet 1 of 1	