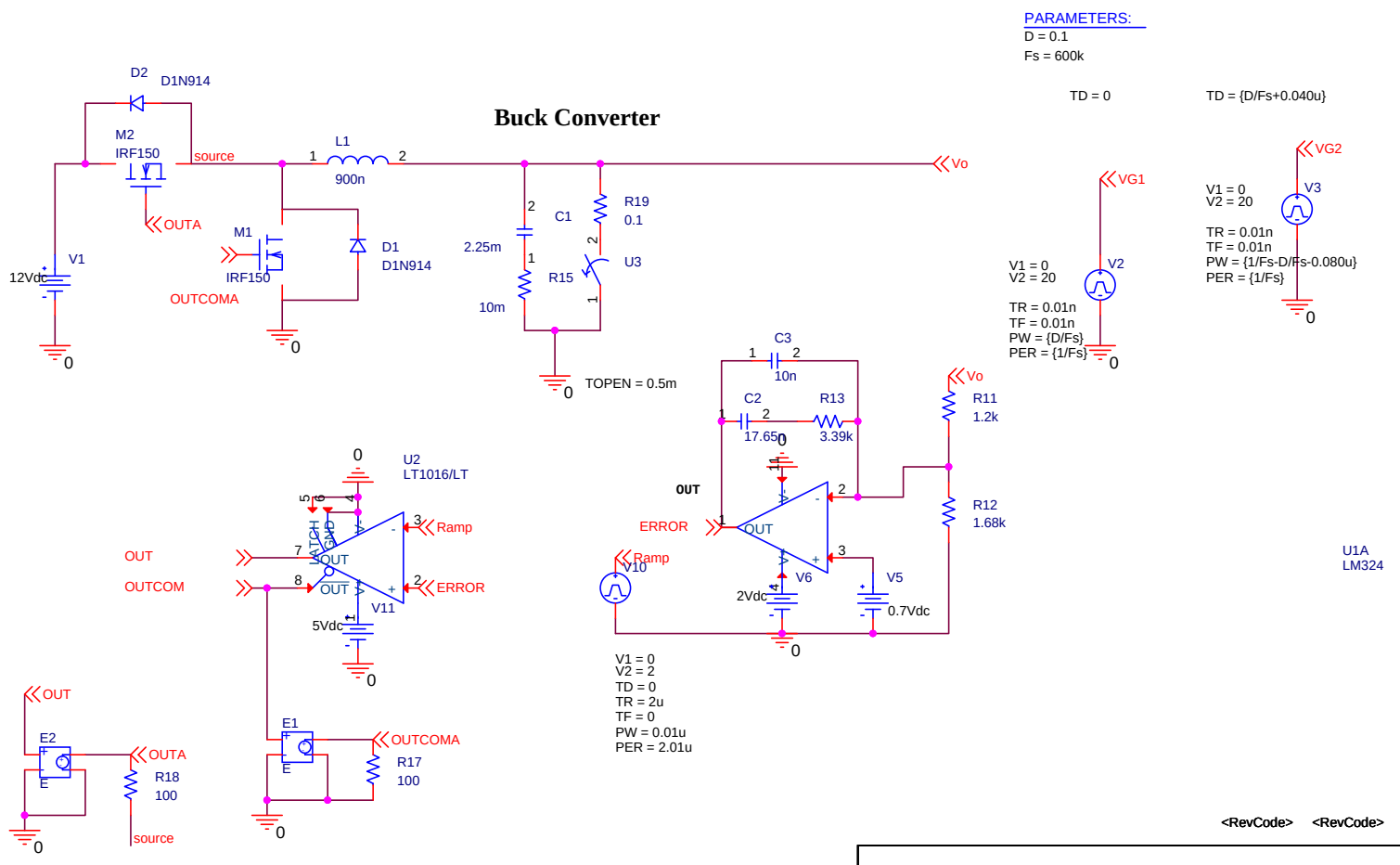

<RevCode> <RevCode>

Title	<Title>	
Size A	Document Number <Doc>	Rev
Date: Saturday, January 19, 2013	Sheet 1 of 1	