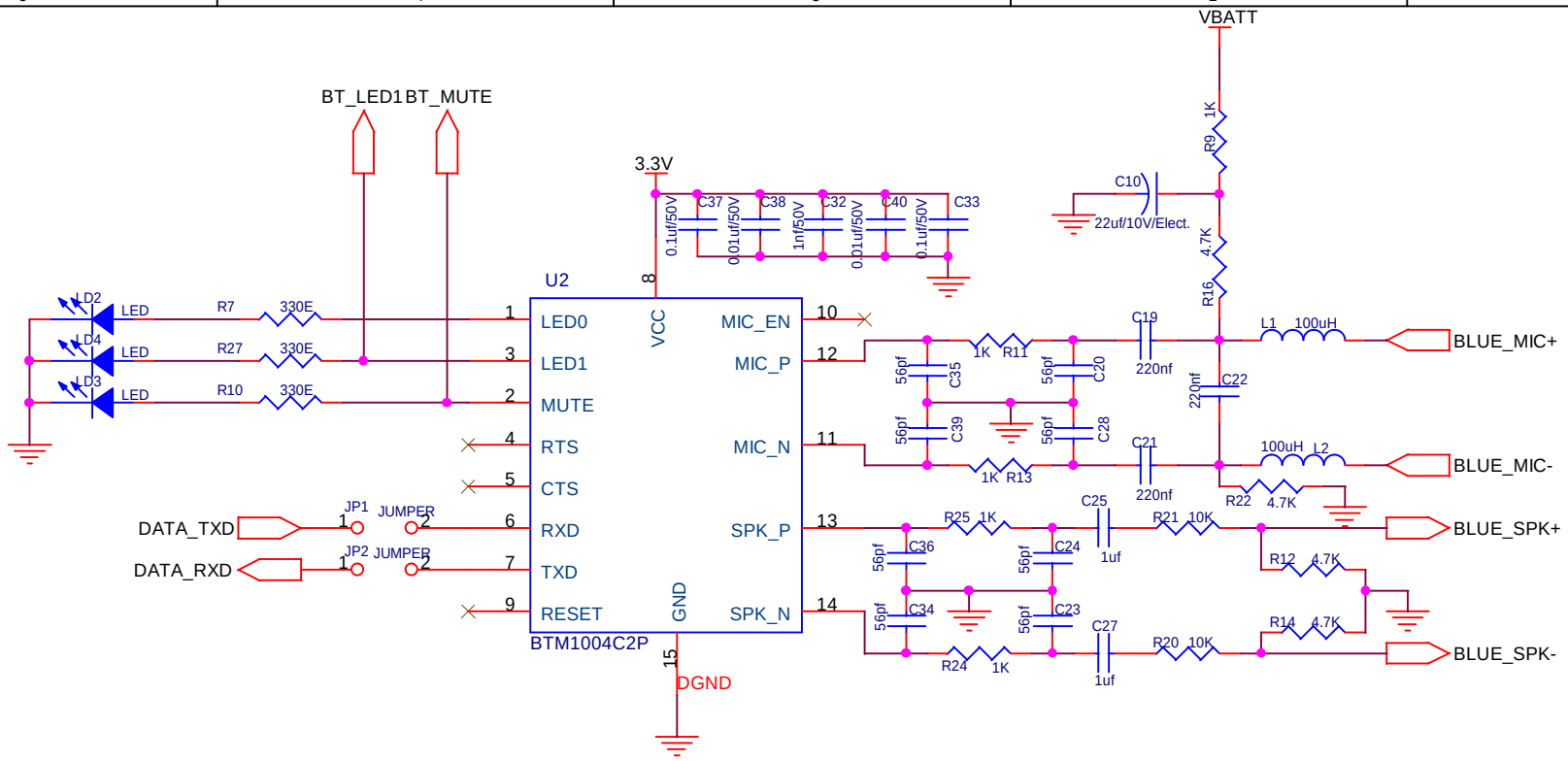

BLUETOOTH INTERFACING

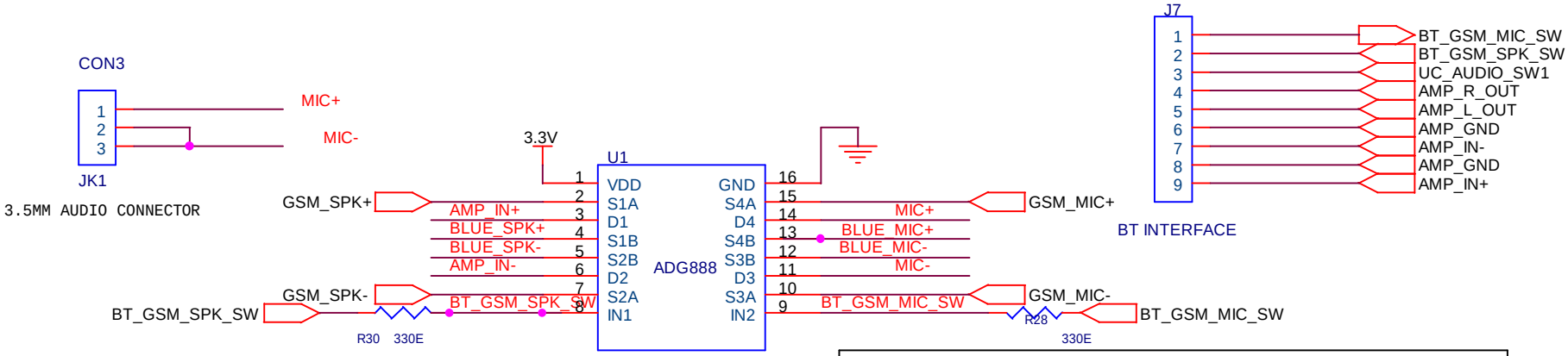

Title	Micro VBB (Bluetooth based system)		
Size A	Document Number <Doc>		Rev <RevCode>
Date: Friday, December 09, 2011		Sheet 1 of 3	