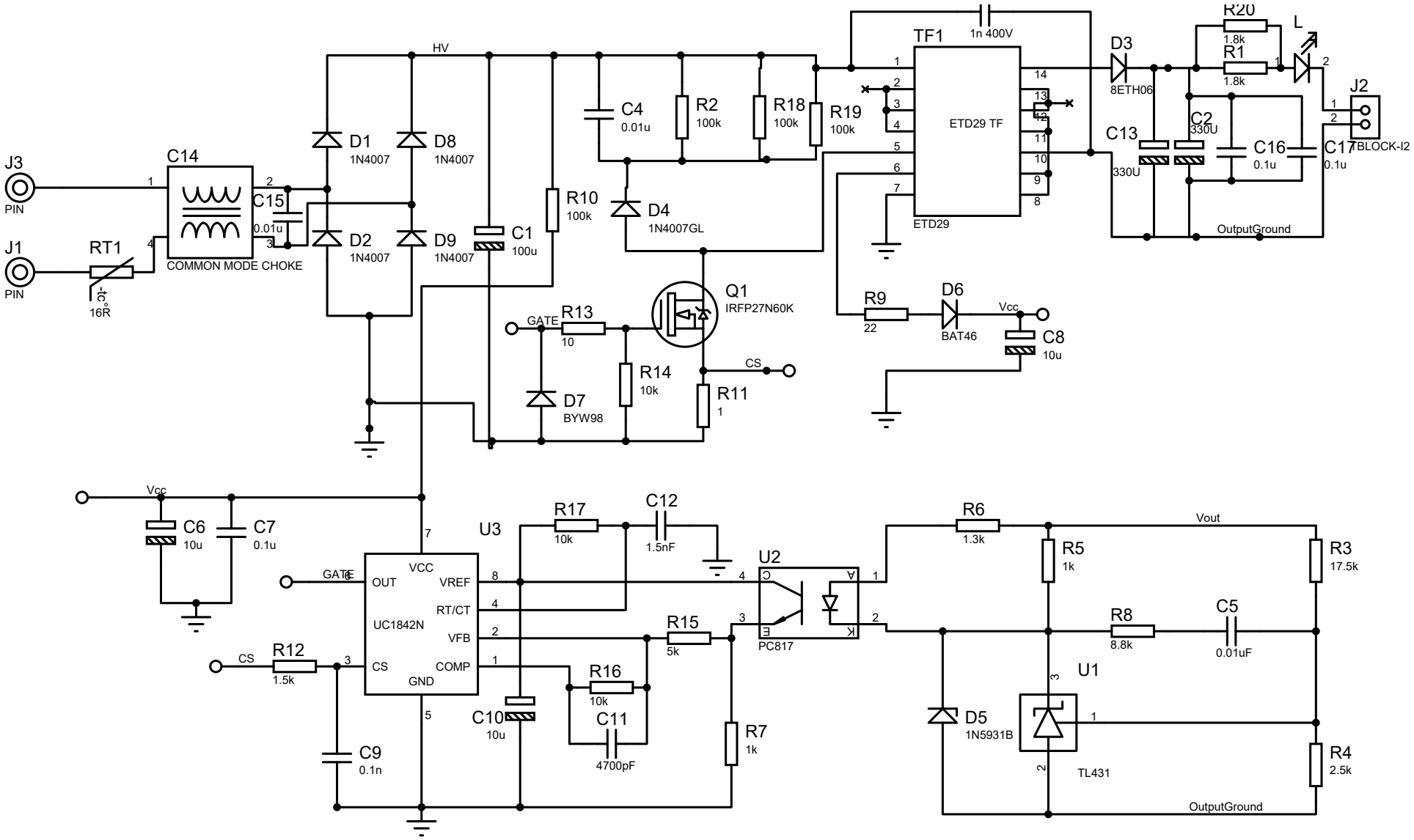


Flyback Converter 20V 3A V.2