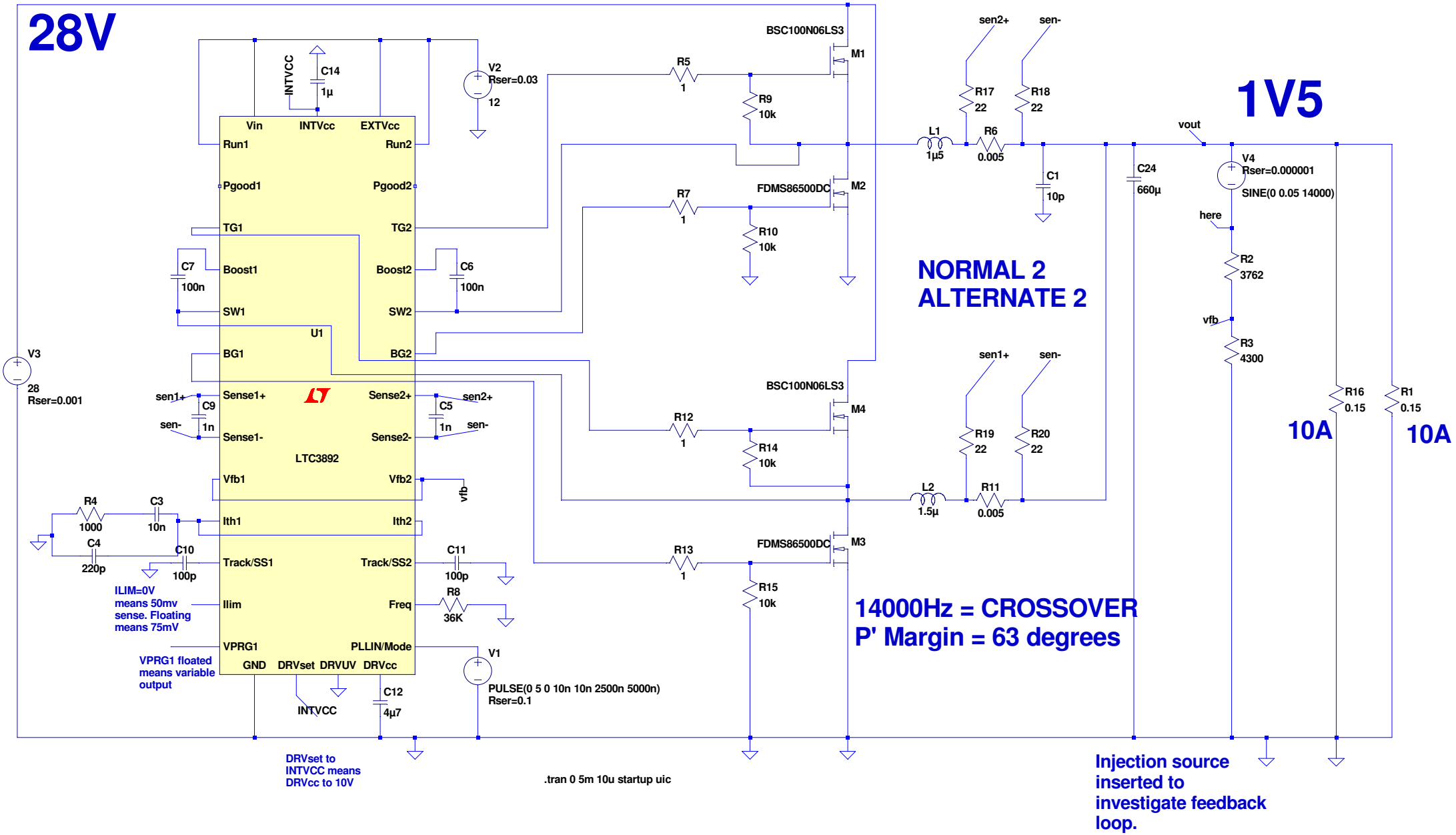

--- C:\forum\dual buck\Dual Buck _LTC3892_28VIN to 1V5 at 20A _200KHZ.ASC ---