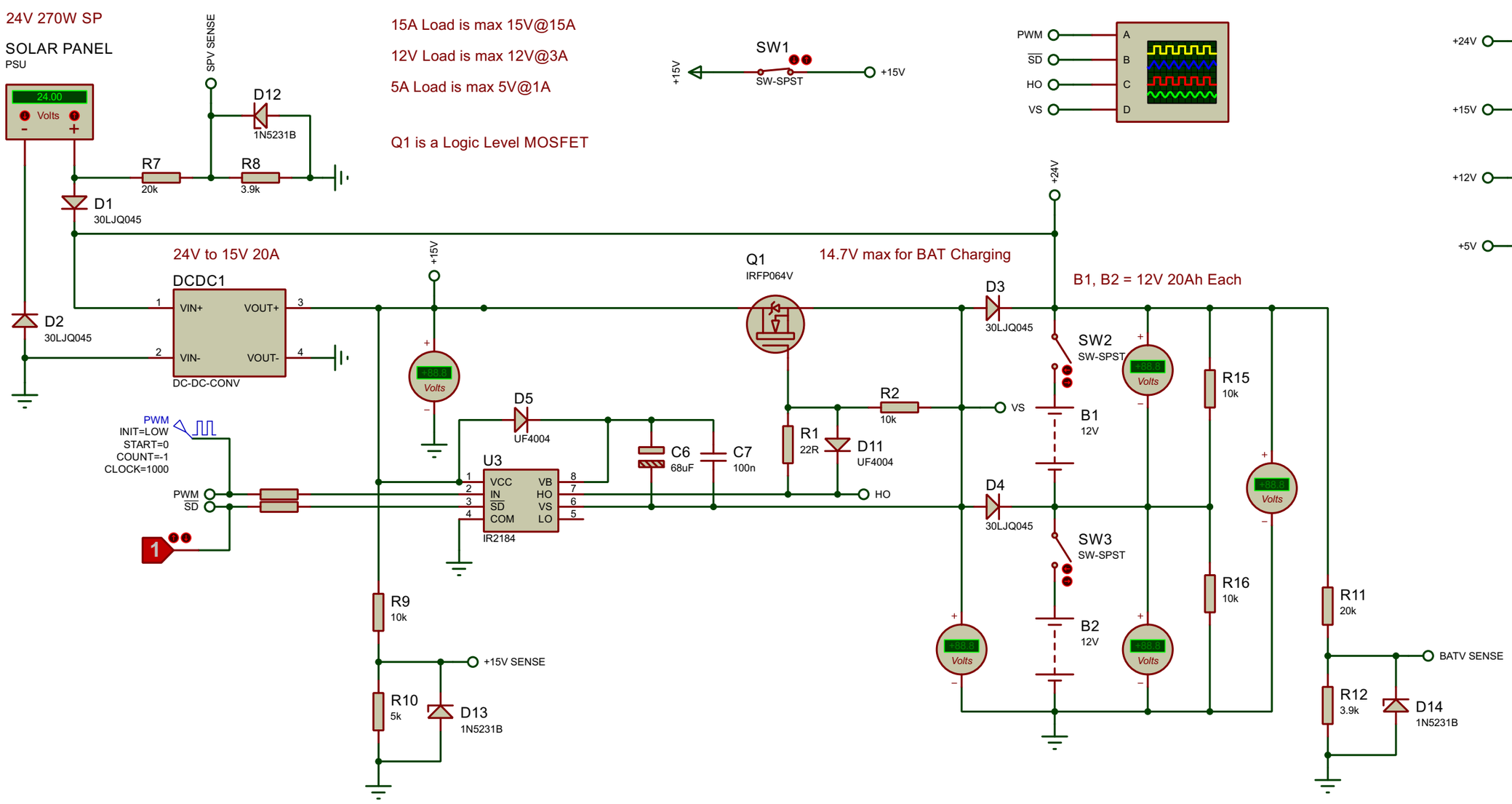

https://www.ebay.com/itm/WaterProof-24V-to-15V-20A-300W-DC-DC-Step-DOWN-Power-Converter-Regulator-/152975775363

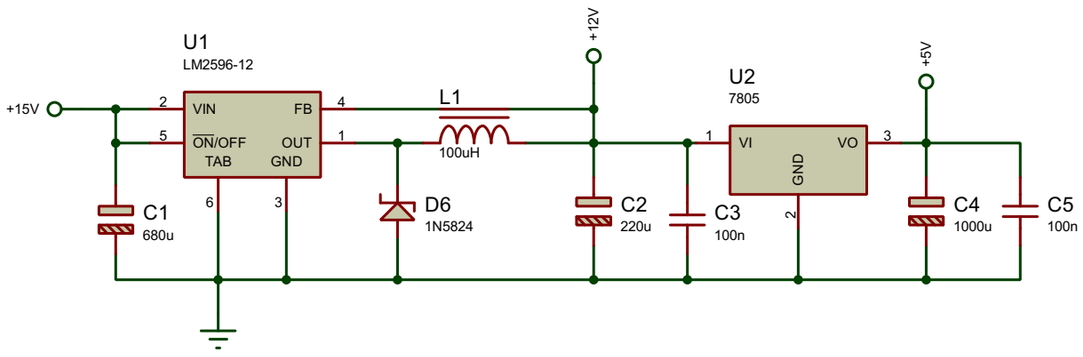

FILE NAME: PSU2.4.pdsprj	DATE: 08-12-2019
DESIGN TITLE: ECCS-PSU	PAGE: 1 of 1
PATH: E:\Assignments\PSU2.4.pdsprj	
BY: Jayanth D [jayanthd2k12@gmail.com] REV: 1.0	TIME: 05:33:04 PM