24V 270W SP

SOLAR PANEL

PSU

15A Load is max 15V@15A

12V Load is max 12V@3A

5A Load is max 5V@1A

https://www.ebay.com/itm/WaterProof-24V-to-15V-20A-300W-DC-DC-Step-DOWN-Power-Converter-Regulator-/152975775363

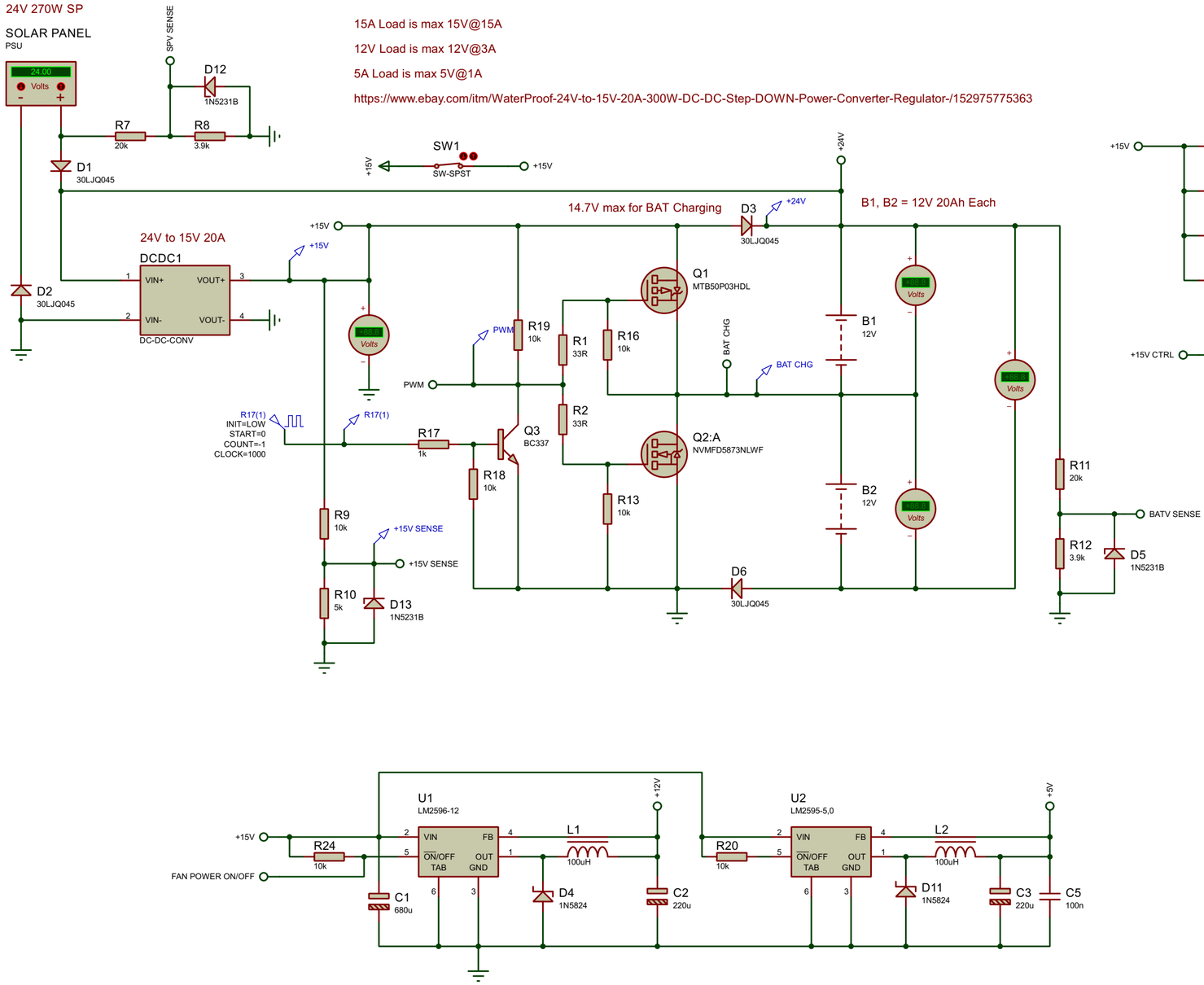

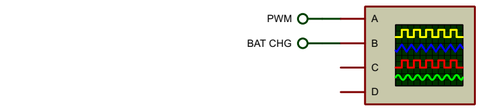

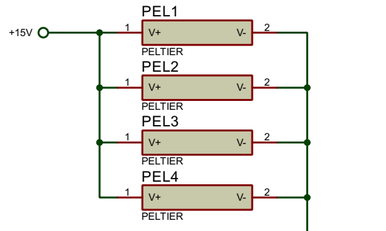

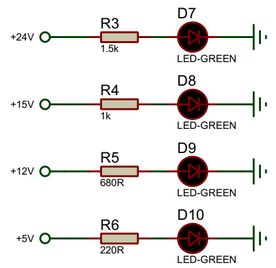

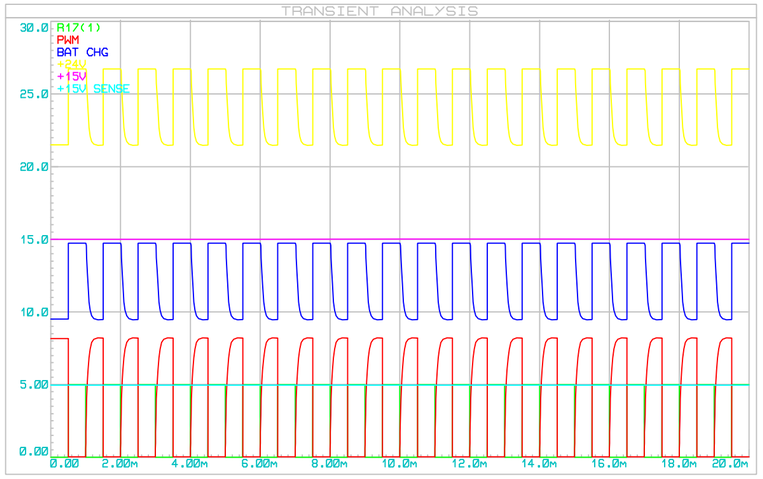

FILE NAME:	PSU-1.3.pdsprj
DESIGN TITLE:	PSU
PATH:	E:\Projects\Hamza\ECCS\PSU-1.3.pdsprj
BY:	Jayanth D [jayanthd2k12@gmail.com] REV: 1.0
DATE:	18-12-2019
PAGE:	1 of 1
TIME:	03:15:05 PM