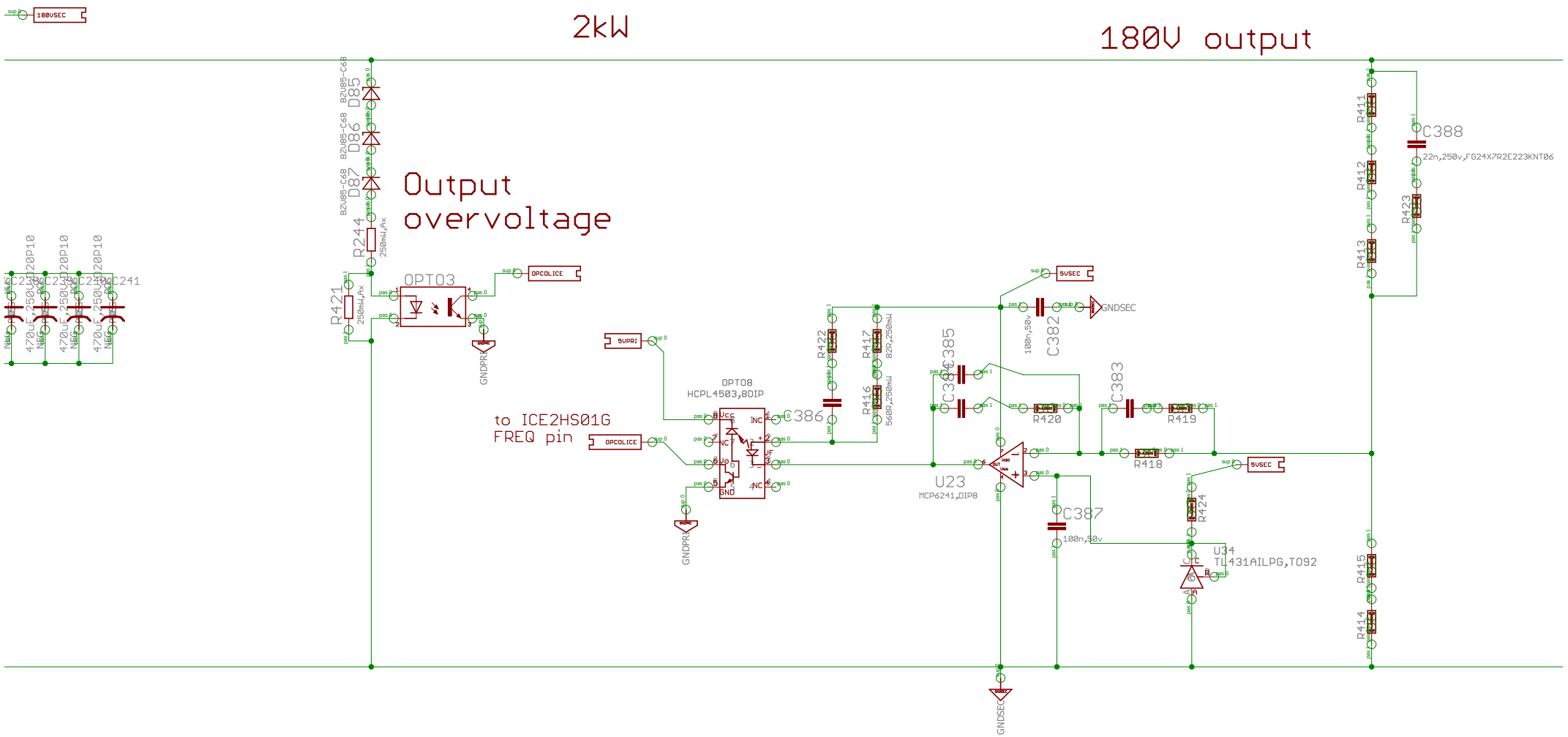

04/05/2022 16:36 f=0.80 C:\SMPS_innovation_S3___\Bass Amp PSU____6\Eagle\LLC2kW.sch (Sheet: 5/12)