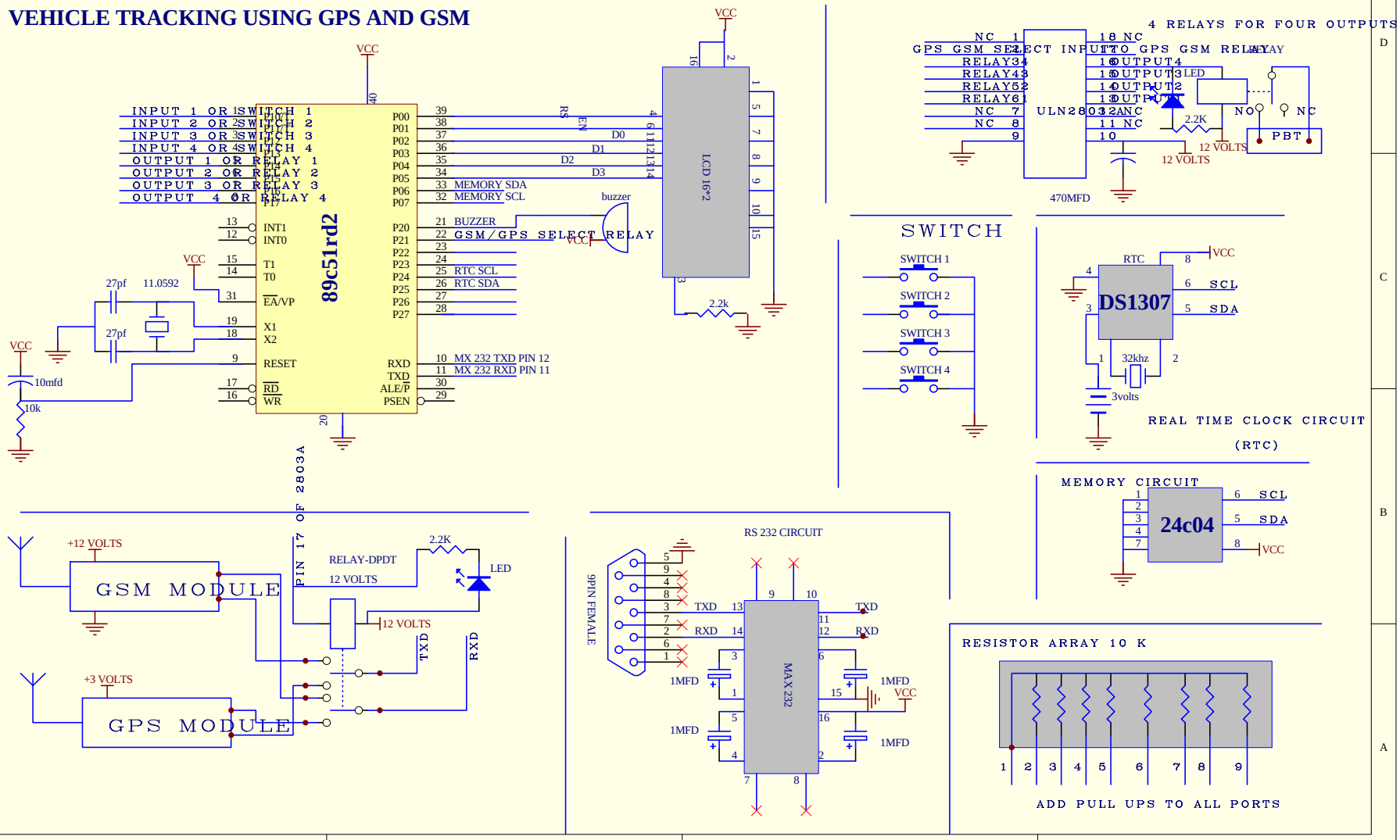VEHICLE TRACKING USING GPS AND GSM