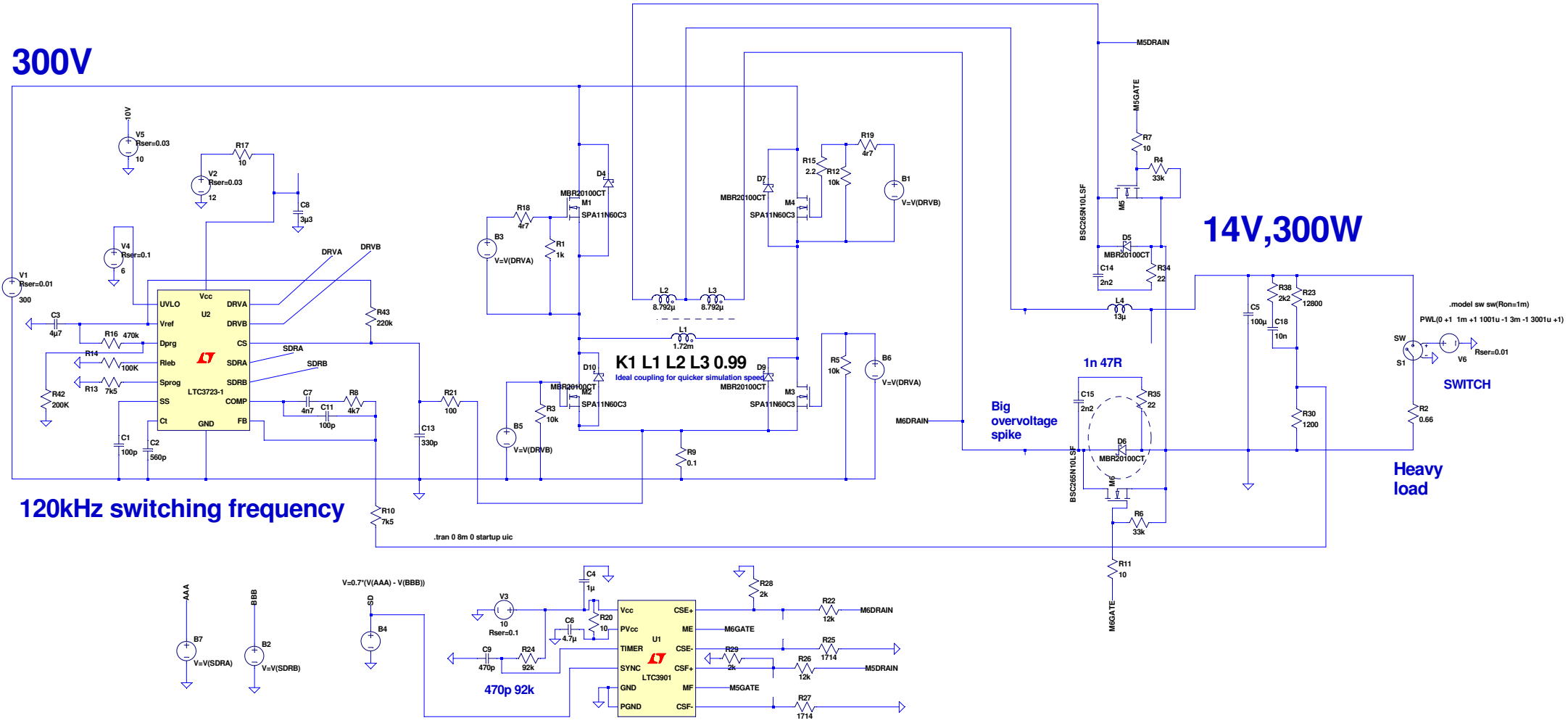Full bridge with synchronous rectifiers