OFFLINE FLYBACK SMPS..variable vout

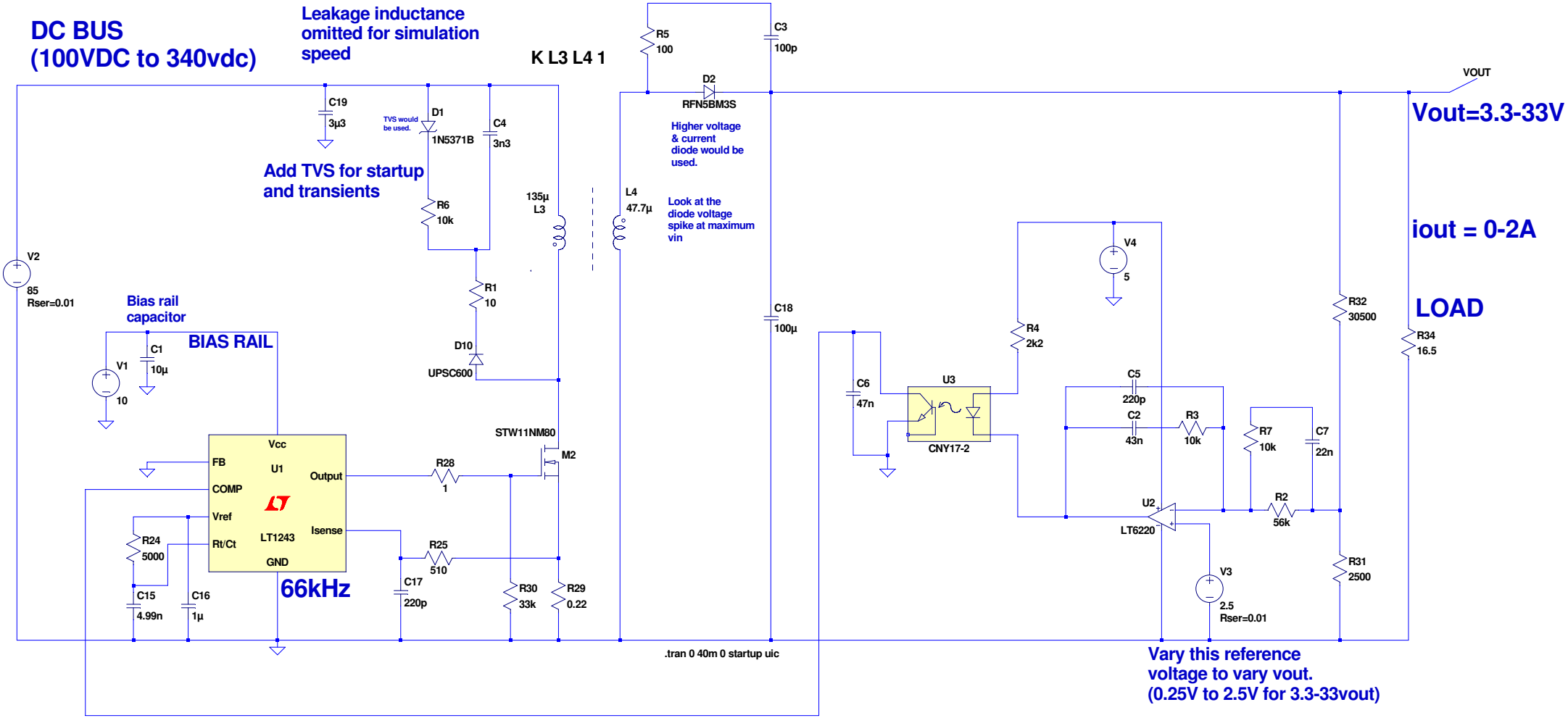

--- C:\CV _16\power int\sims\FORUM 25V 1.3A FLYBACK _DCM _var vout\Flyback 25V 1.3A _DCM.asc ---