OFFLINE FLYBACK SMPS CCM

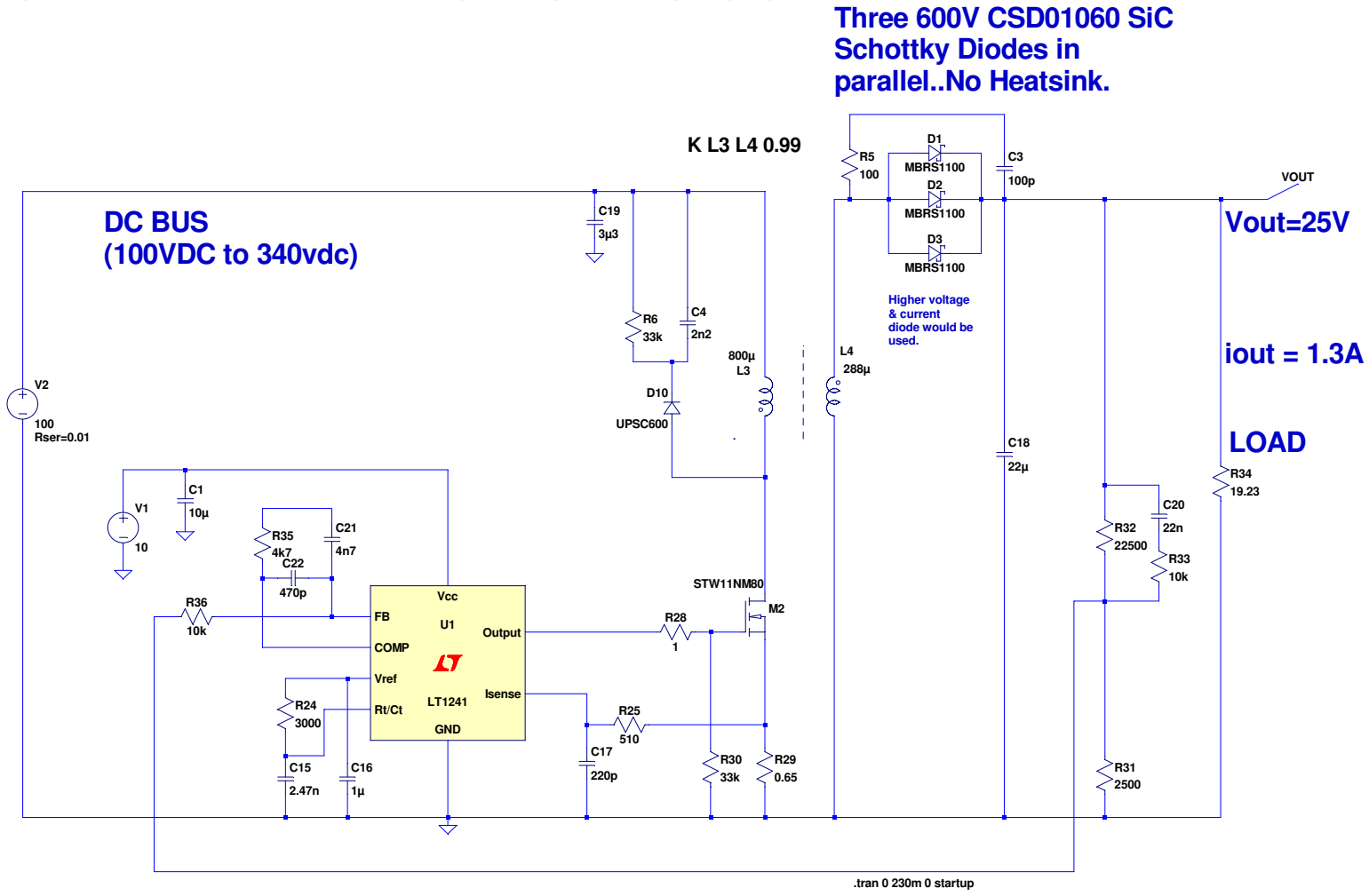

--- C:\CV _16\power int\sims\FORUM 25V 1.3A FLYBACK\Flyback 25V 1.3A _CCM.ASC ---