DATE: 8th Nov 2018

Mains Input Filter for 60W Offline PFC'd Flyback (DCM)

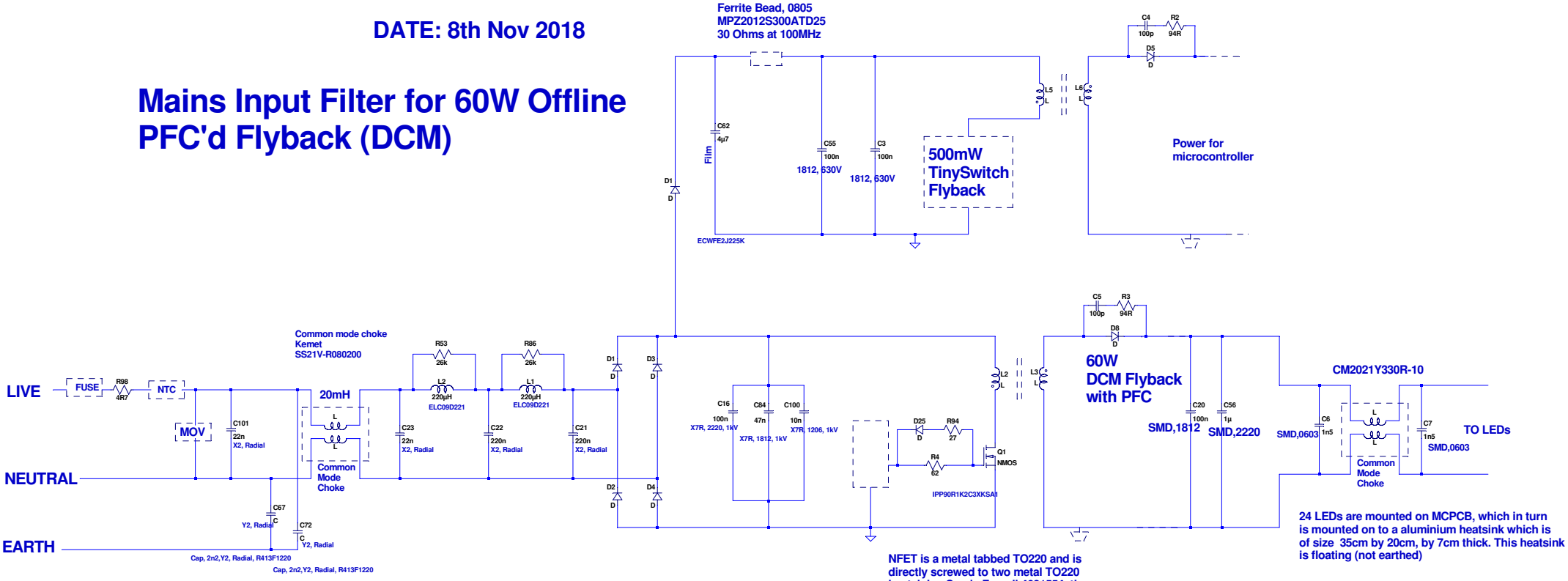

NFET is a metal tabbed TO220 and is directly screwed to two metal TO220 heatsinks. One is Farnell 4621554, the other is Farnell 1611445)

24 LEDs are mounted on MCPCB, which in turn is mounted on to a aluminium heatsink which is of size 35cm by 20cm, by 7cm thick. This heatsink is floating (not earthed)

--- C:\forum\EMC WORSE\181108\EMC test _181108.asc ---