DATE 22nd August 2018

Mains Input Filter for 60W Oflfine PFC'd Flyback (DCM)

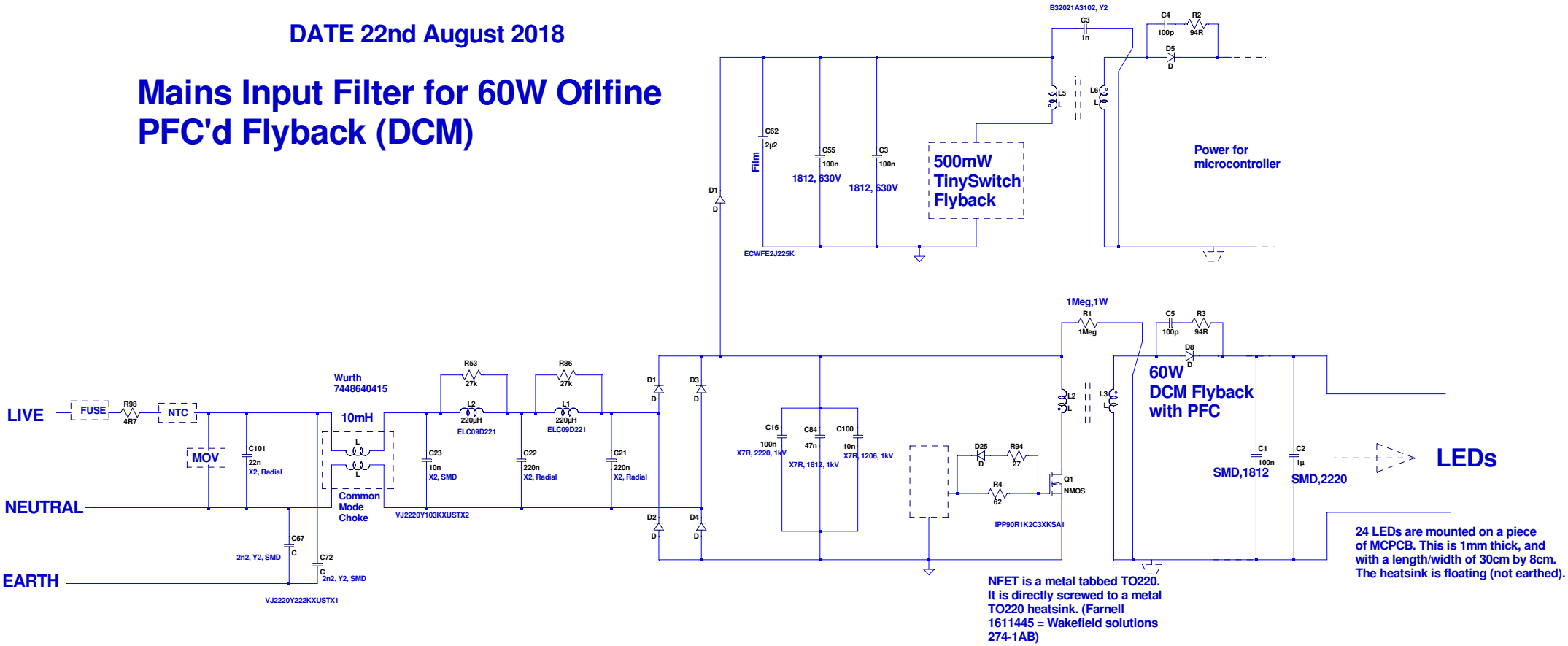

NFET is a metal tabbed TO220. It is directly screwed to a metal TO220 heatsink. (Farnell 1611445 = Wakefield solutions 274-1AB)

24 LEDs are mounted on a piece of MCPCB. This is 1mm thick, and with a length/width of 30cm by 8cm. The heatsink is floating (not earthed).

--- C:\forum\EMC WORSE\180822\EMC test _180822 _3.asc ---