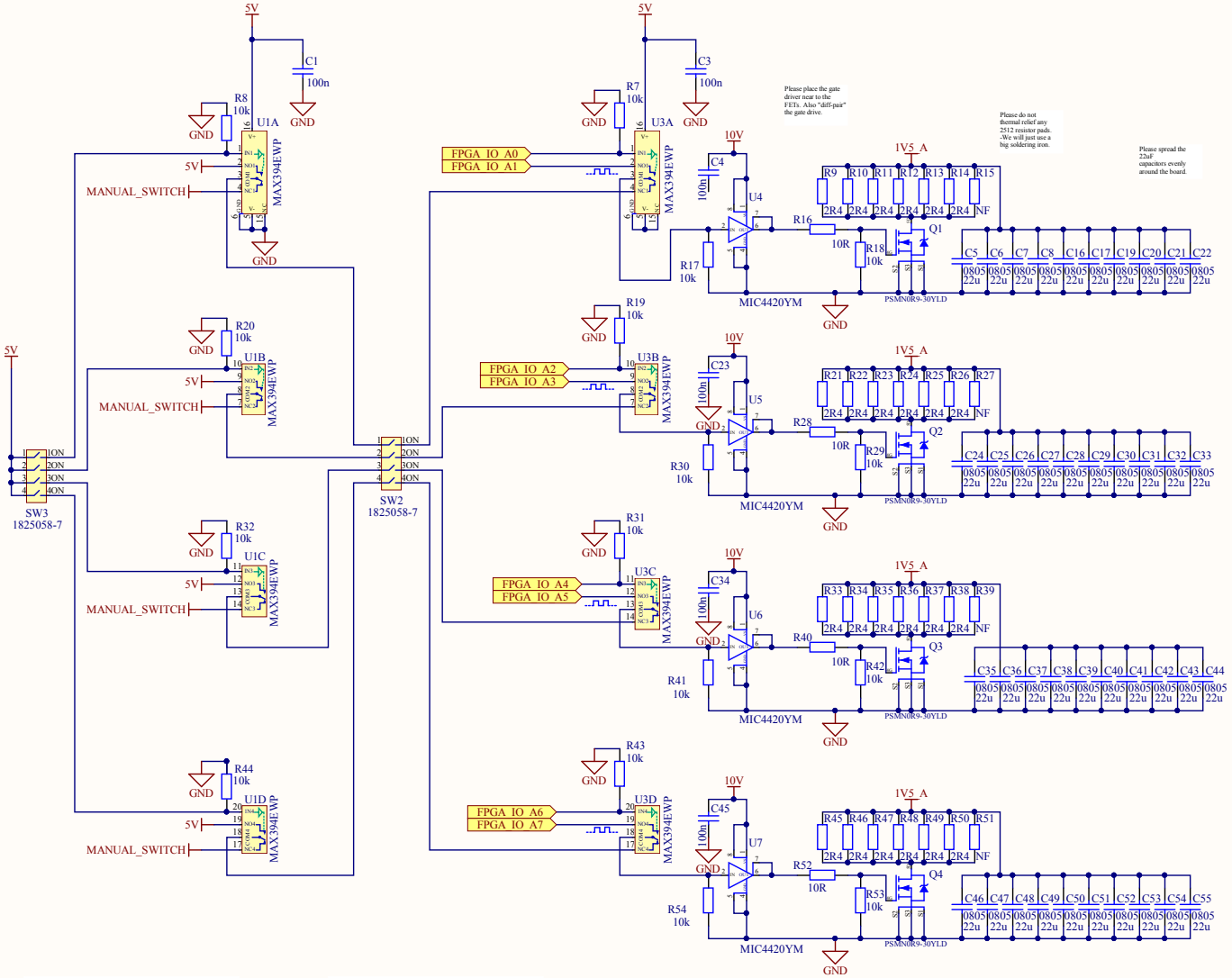

SELECT
FET_ON_ALWAYS
or
MANUAL_SWITCH

SELECT
FET_OFF_ALWAYS

SELECT FPGA input
or
MANUAL input

Title		
Size: A3	Project:	Rev: A.00
Date: 05/10/2016	Time: 17:50:30	Sheet 1 of 1
File:		