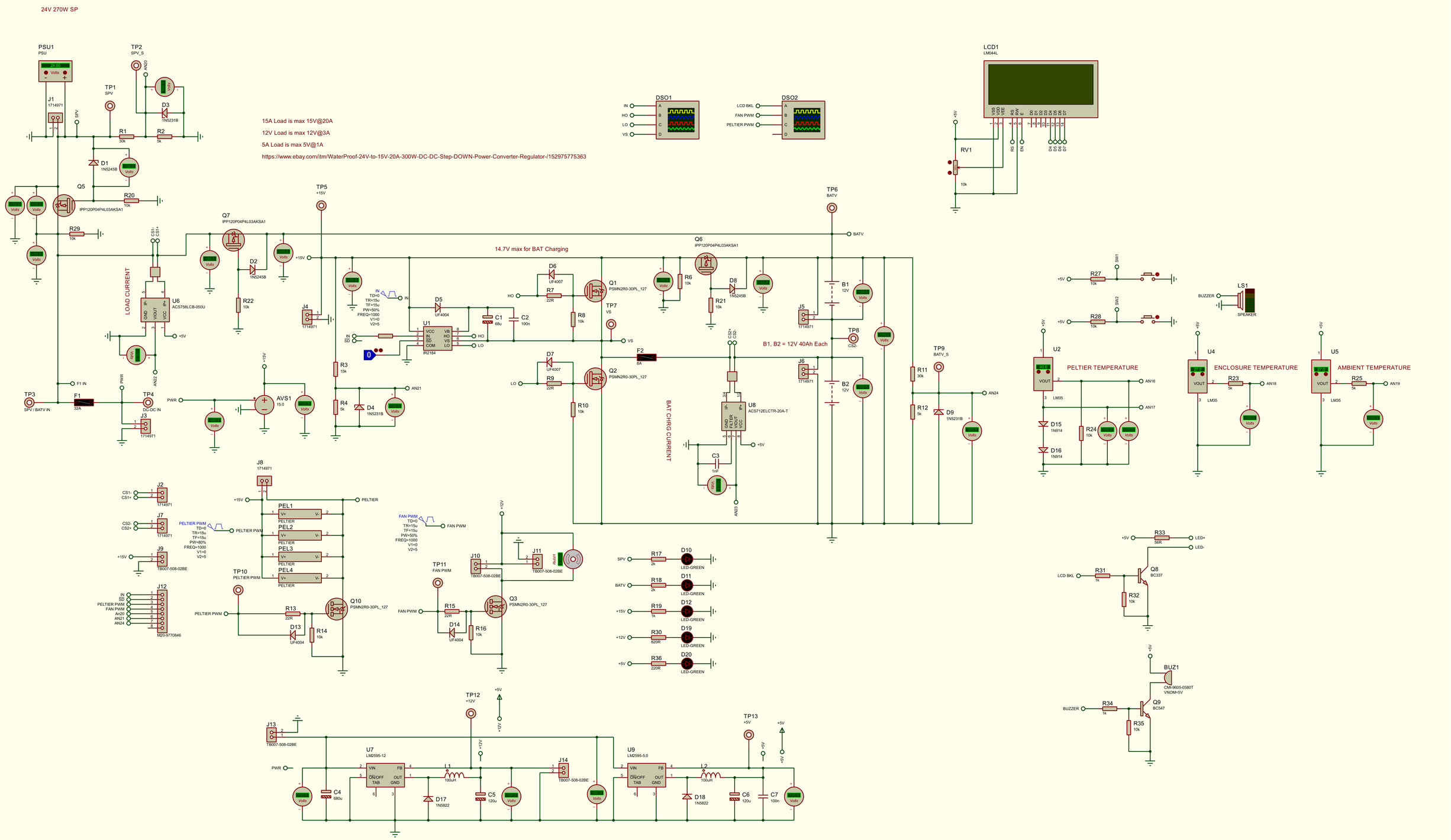
24V 270W SP
15A Load is max 15V@20A
12V Load is max 12V@3A
5A Load is max 5V@1A
https://www.ebay.com/itm/WaterProof-24V-to-15V-20A-300W-DC-DC-Step-DOWN-Power-Converter-Regulator-/152975775363
PSU1
PSU
TP1
SPV
TP2
SPV_S
D3
1N5231B
R1
30k
R2
5k
D1
1N5245B
Q5
IPP120P04P4L03AKSA1
R20
10k
R29
10k
LOAD CURRENT
U6
ACS758LCB-050U
TP3
SPV / BATV IN
F1
32A
TP4
DC-DC IN
J3
1714971
AVS1
15.0
Q7
IPP120P04P4L03AKSA1
D2
1N5245B
R22
10k
TP5
+15V
J4
1714971
R3
15k
R4
5k
D4
1N5231B
AN21
AN22
AN24
U1
IR2184
VCC
IN
SD
COM
VB
HO
VS
LO
D5
UF4004
C1
68u
C2
100n
D6
UF4007
R7
22R
Q1
PSMN2R0-30PL_127
R8
10k
D7
UF4007
R9
22R
Q2
PSMN2R0-30PL_127
R10
10k
TP7
VS
F2
5A
TP6
BATV
Q6
IPP120P04P4L03AKSA1
R6
10k
D8
1N5245B
R21
10k
B1
12V
B2
12V
B1, B2 = 12V 40Ah Each
J5
1714971
J6
1714971
TP8
CS2-
U8
ACS712ELCTR-20A-T
BAT CHRG CURRENT
C3
1nF
TP9
BATV_S
R11
30k
R12
5k
D9
1N5231B
LCD1
LM044L
RV1
10k
DSO1
DSO2
LCD BKL
FAN PWM
PELTIER PWM
R27
10k
R28
10k
SW1
SW2
LS1
SPEAKER
BUZZER
U2
LM35
PELTIER TEMPERATURE
D15
1N914
D16
1N914
R24
10k
U4
LM35
ENCLOSURE TEMPERATURE
R23
5k
U5
LM35
AMBIENT TEMPERATURE
R25
5k
J8
1714971
J2
1714971
J7
1714971
J9
TB007-508-02BE
J12
M20-9770846
PEL1
PEL2
PEL3
PEL4
PELTIER
TP10
PELTIER PWM
R13
22R
D13
UF4004
R14
10k
Q10
PSMN2R0-30PL_127
TP11
FAN PWM
J10
TB007-508-02BE
J11
TB007-508-02BE
R15
22R
D14
UF4004
R16
10k
Q3
PSMN2R0-30PL_127
R17
2k
R18
2k
R19
1k
R30
820R
R36
220R
D10
D11
D12
D19
D20
LED-GREEN
R33
56R
LED+
LED-
Q8
BC337
R31
1k
R32
10k
BUZ1
CMI-9605-0580T
VNOM=5V
R34
1k
Q9
BC547
R35
10k
J13
TB007-508-02BE
TP12
+12V
U7
LM2595-12
VIN
FB
ON/OFF
TAB
OUT
GND
L1
100uH
D17
1N5822
C4
680u
C5
120u
J14
TB007-508-02BE
U9
LM2595-5.0
L2
100uH
D18
1N5822
C6
120u
C7
100n
TP13
+5V
FILE NAME: ECCS_1.pdsprj
DESIGN TITLE: ECCS
PATH: E:\Hamza\ECCS_1.pdsprj
BY: Jayanth D [jayanthd2k12@gmail.com] REV: 1.0
DATE: 29-12-2019
PAGE: 1 of 2
TIME: 01:48:49 PM