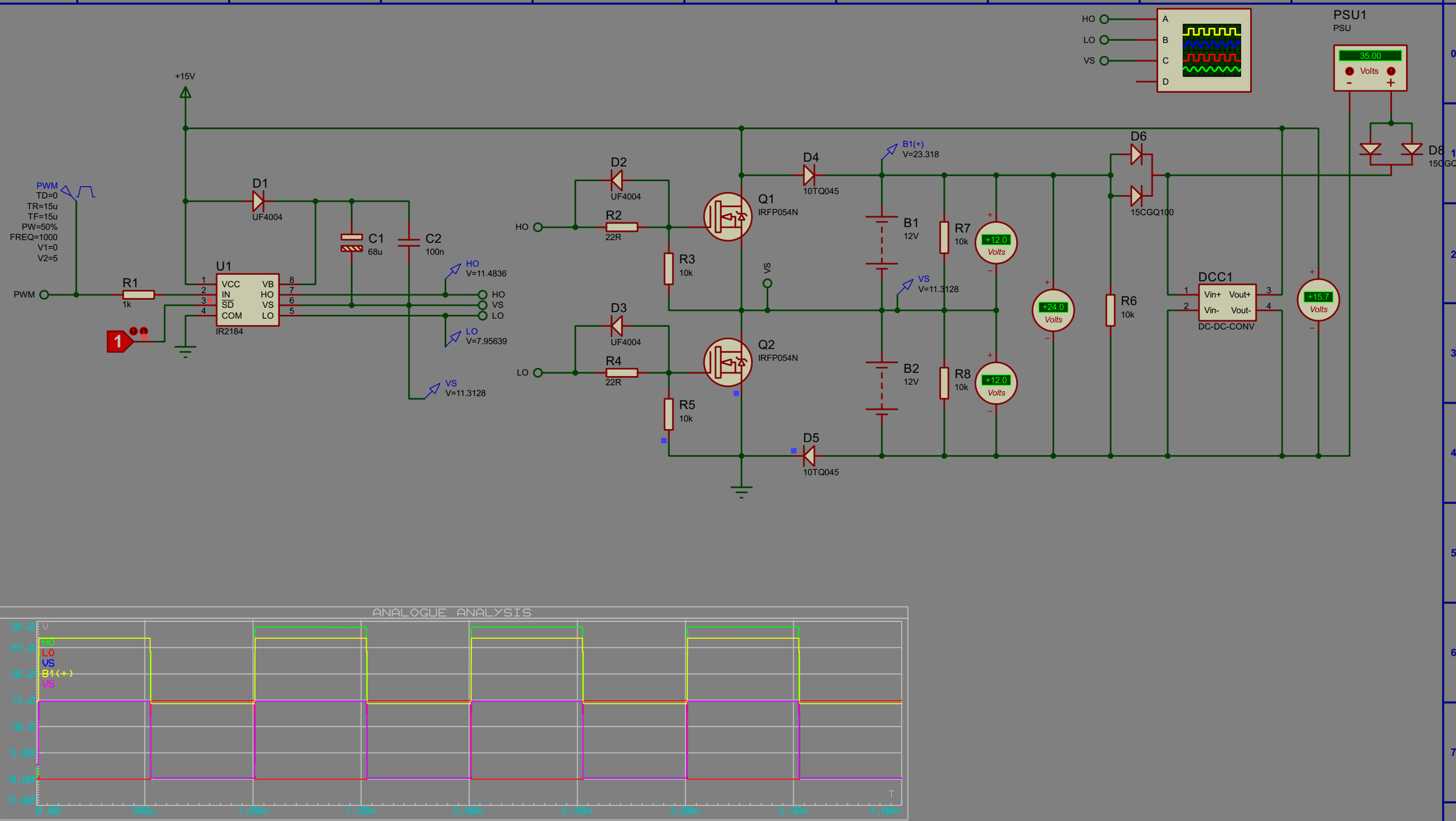

FILE NAME:	BAT CHARGER-REV3.pdsprj	DATE:	02-01-2020
DESIGN TITLE:	Battery Charger	PAGE:	1 of 1
PATH:	E:\Projects\BAT CHARGER-REV3.pdsprj		
BY:	Jayanth D [jayanthd2k12@gmail.com] REV: 1.0	TIME:	04:49:14 AM