150W Offline LED driver (Non isolated)

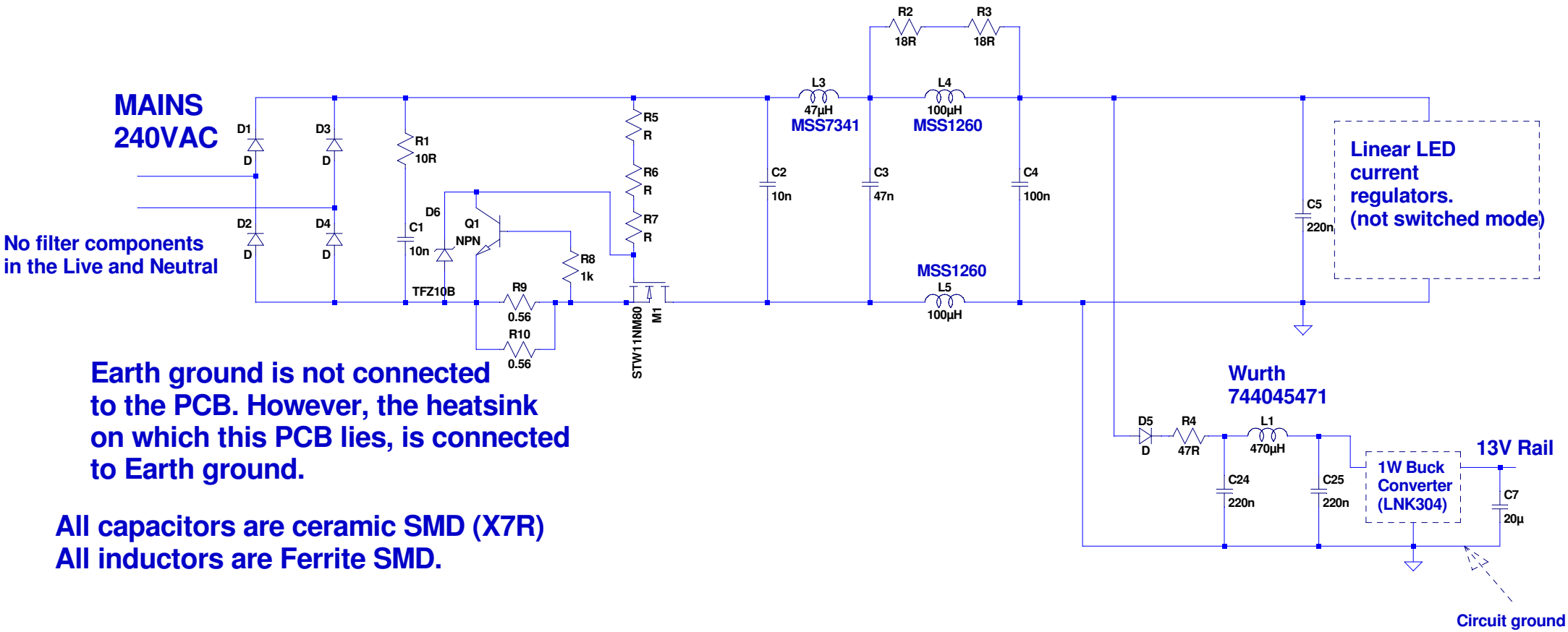

Earth ground is not connected to the PCB. However, the heatsink on which this PCB lies, is connected to Earth ground.

All capacitors are ceramic SMD (X7R)
All inductors are Ferrite SMD.