Sch1

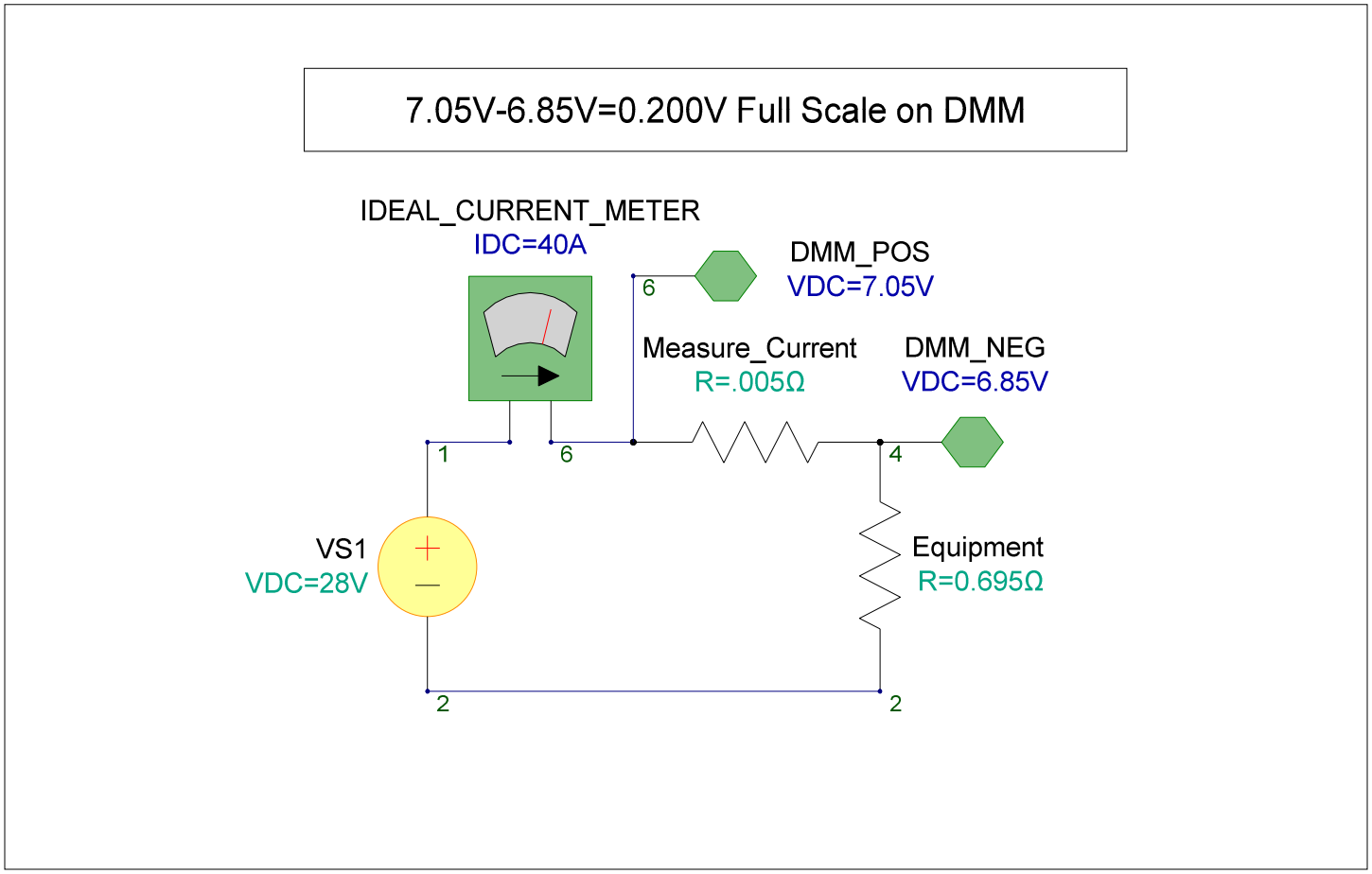

DC1_Data

Variable	(V)	Vscale
IIDEAL_CURRENT_METER__Iprobe=4(	1	0.2
IIDEAL_CURRENT_METER=40		
IVS1__I0=-40		
LogOutput="DCAnalysis : DC12/5/2016.		
Resistance=5e-3=[(V4-V1)/(IVS1__I0)]		
RHSerror=23.45e-15		
V1=7.05		
V2=-20.95		
V4=6.85		
V6=7.05		
VDMM_NEG=6.85		
VDMM_POS=7.05		
Vscale=0.2=[V1-V4]		