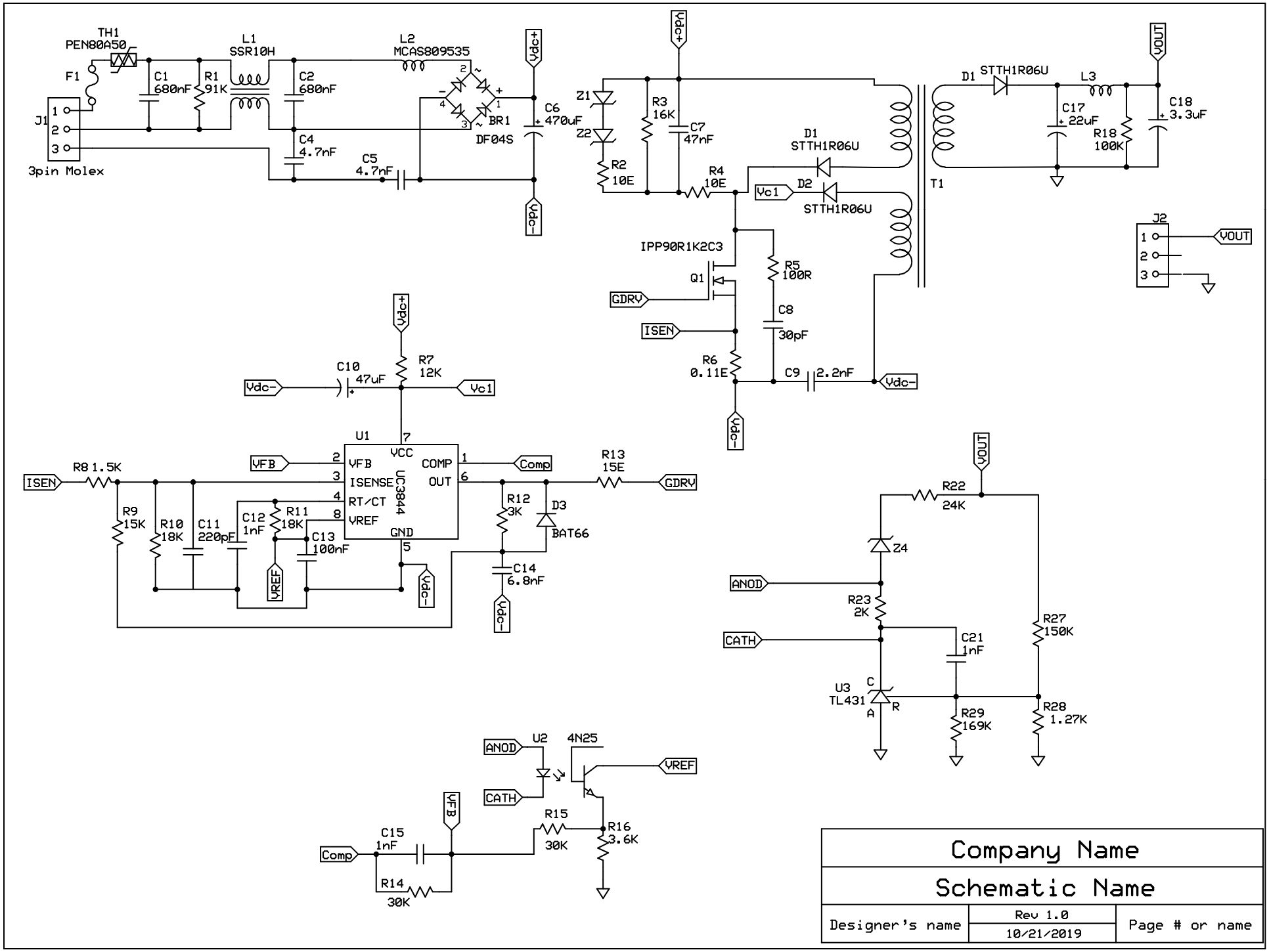

Printed by BoxRDF (c) NCH Software. Free for non-commercial use only.