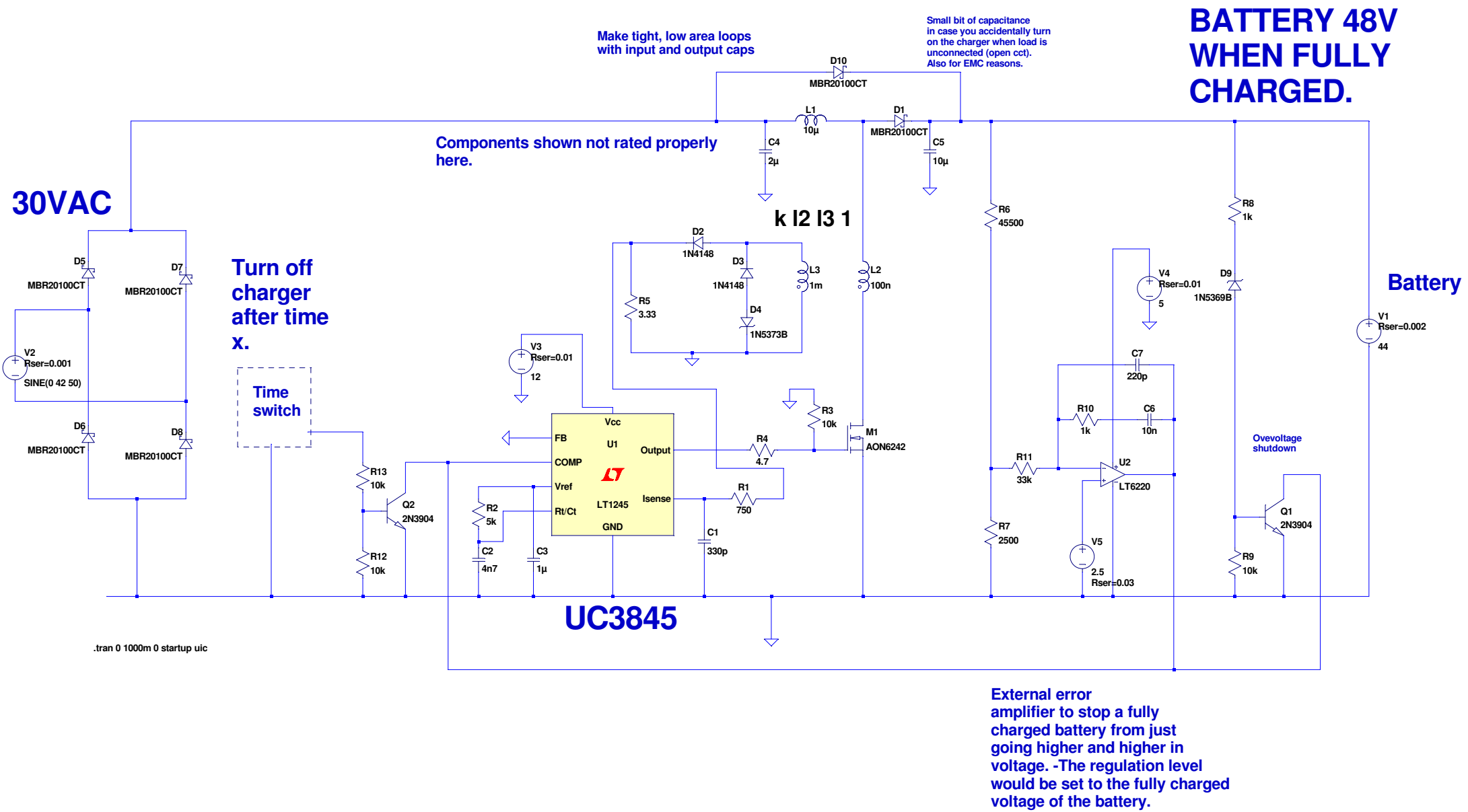

--- C:\forum\PFC_FAST\uc3845 30vac.asc ---