# PFC gate driver for Boost PFC, 1kW

## With series capacitor

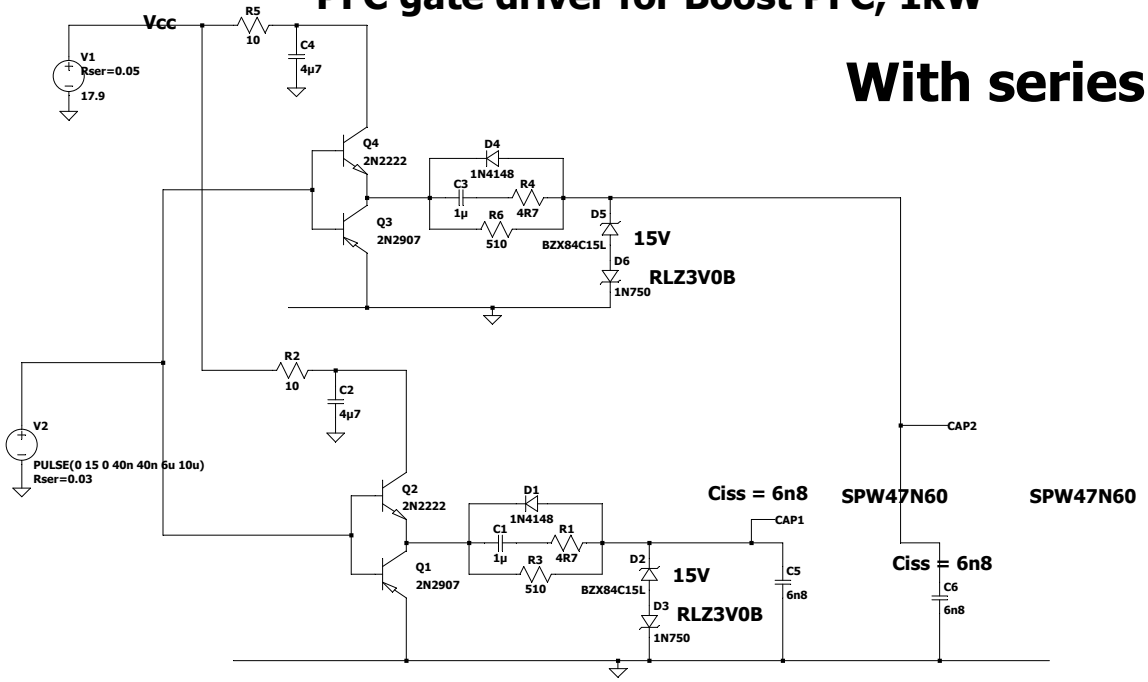


# PFC gate driver for Boost PFC, 1kW

## Without series capacitor

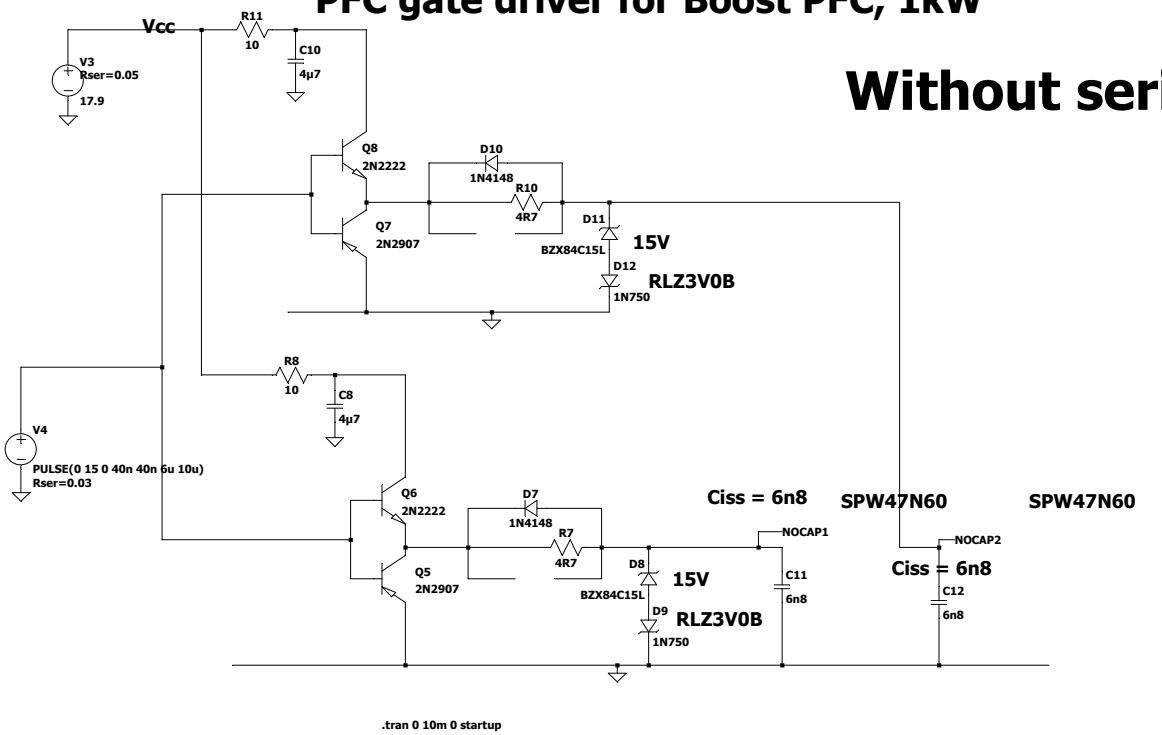


--- C:\fromu\pfc gate\PFC gate driver _series capacitor _1.asc ---