Buck LED driver with intermittent LED connector protection

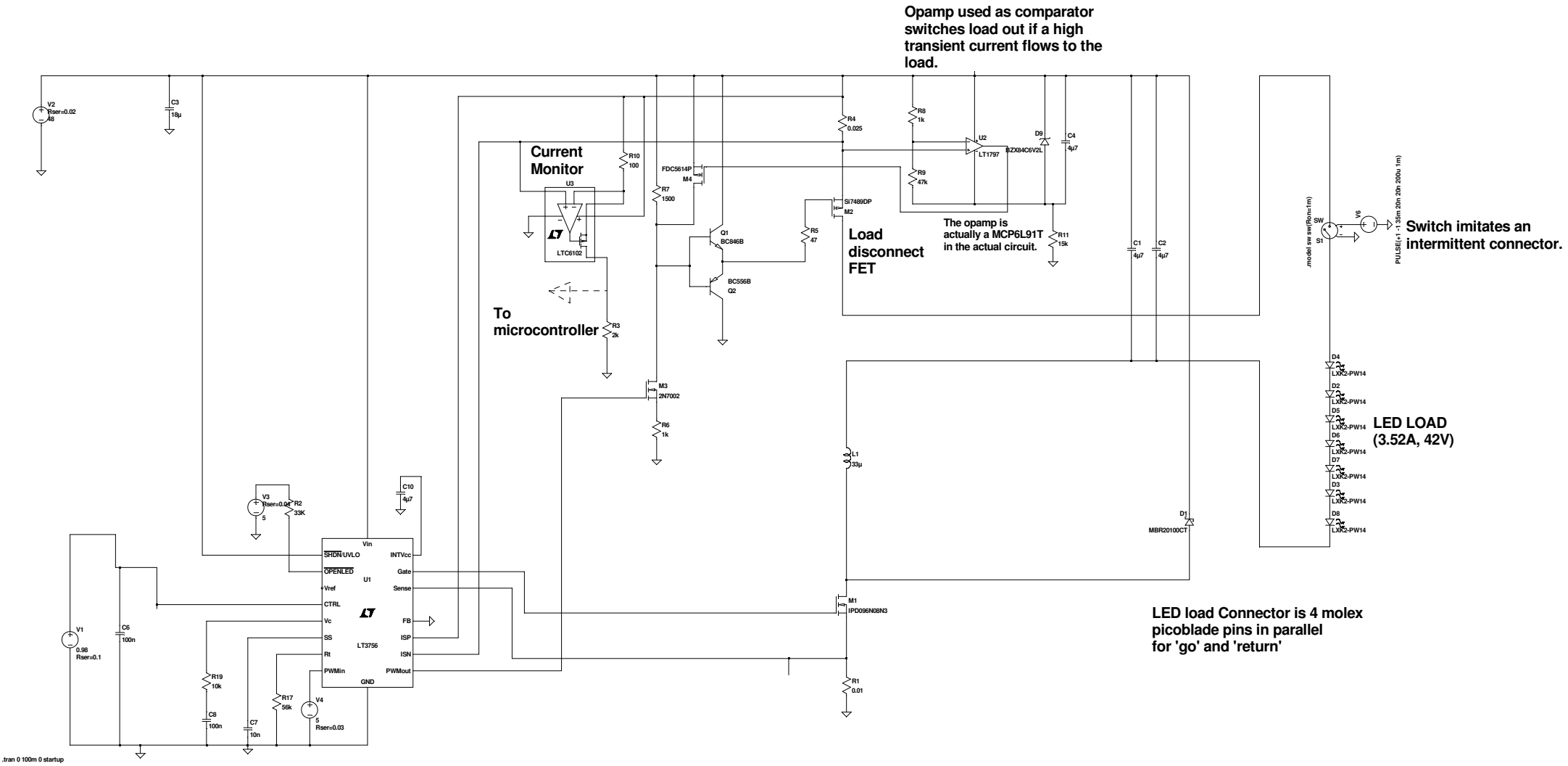

--- C:\forum\shutdown bad\LED driver with connector protection.asc ---