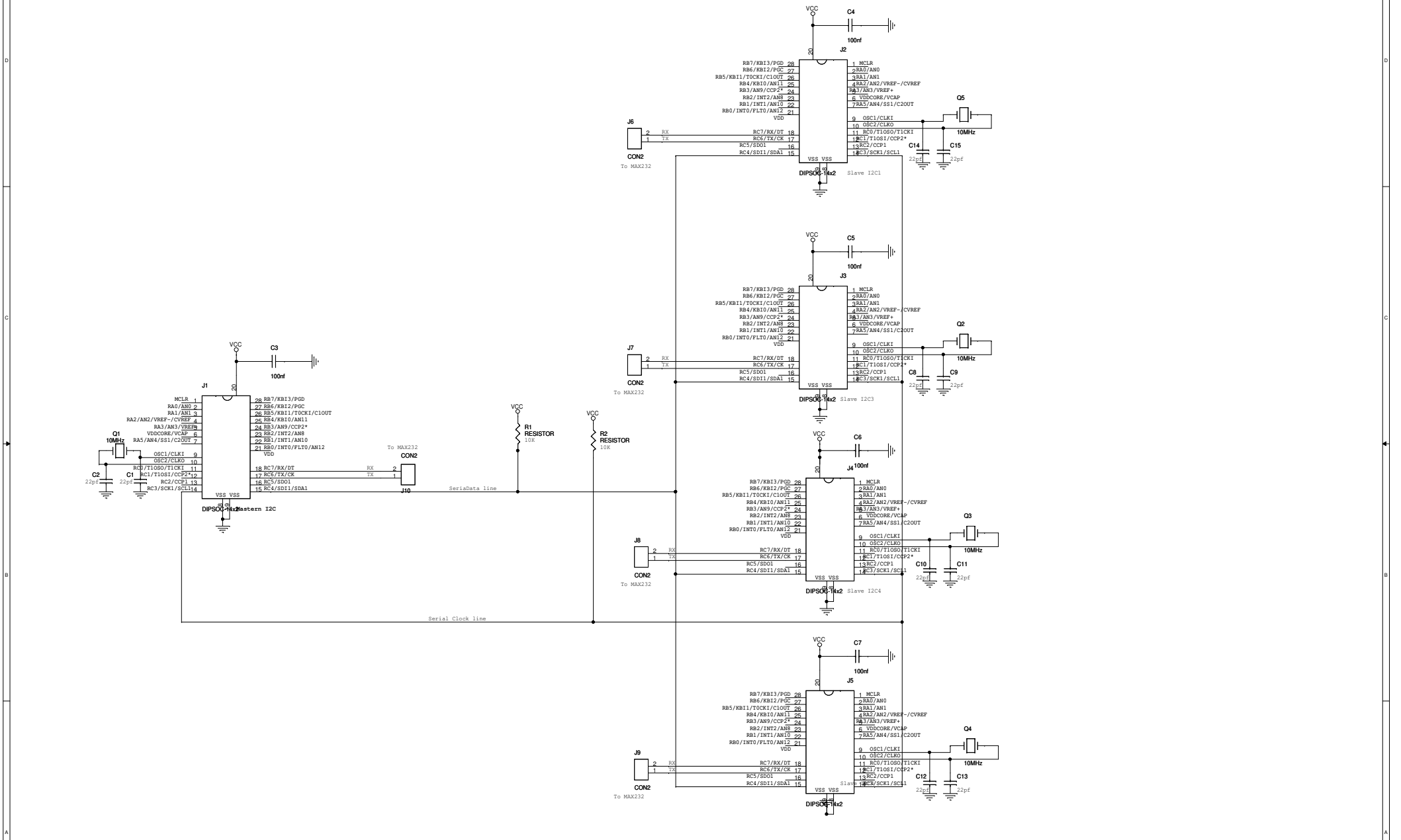Microcontroller Board (Processing unit)