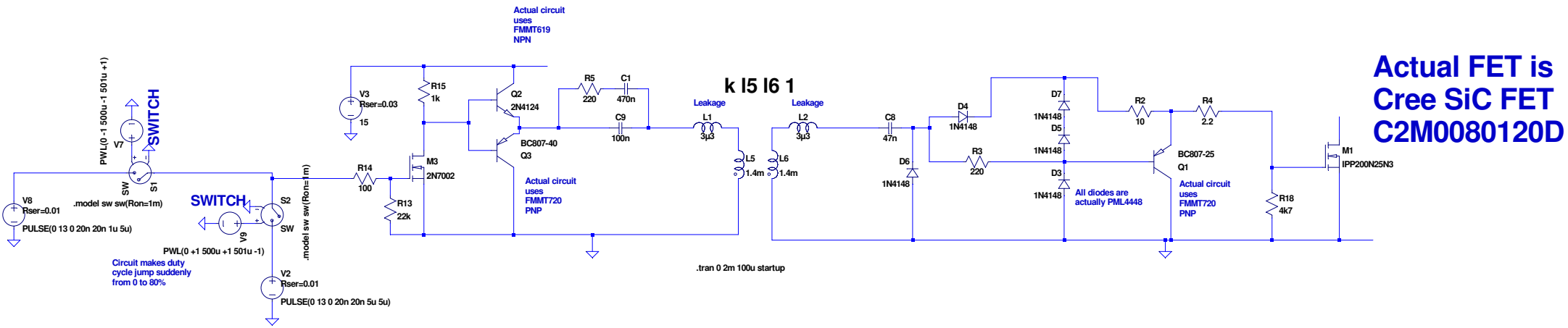

--- C:\forum\fet blow up\Gate drive txfmr problem.asc ---