DUAL CASCADED BUCK 48VOUT 10AOUT

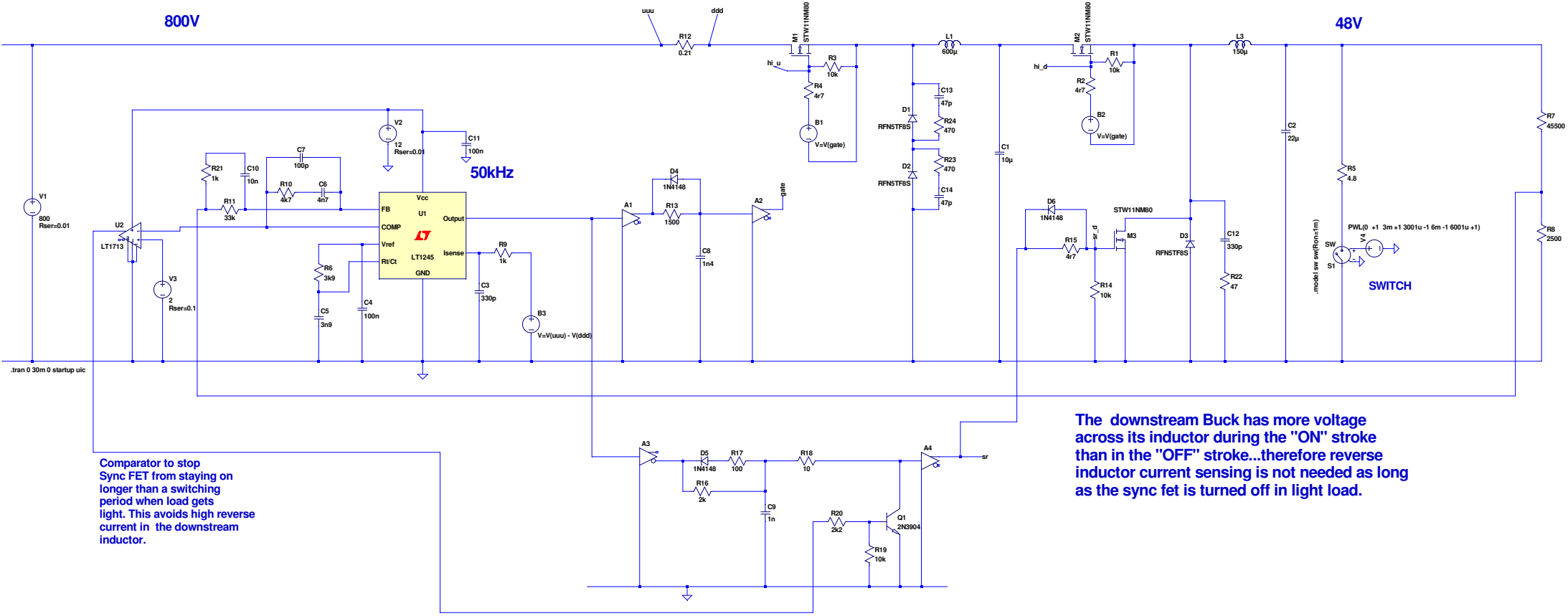

Comparator to stop Sync FET from staying on longer than a switching period when load gets light. This avoids high reverse current in the downstream inductor.

The downstream Buck has more voltage across its inductor during the "ON" stroke than in the "OFF" stroke...therefore reverse inductor current sensing is not needed as long as the sync fet is turned off in light load.

--- C:\SMPS Course _V44\Course Folders\High step down ratio\Dual Buck.asc ---