Service
Service
Service

Service Manual

Horizontal Frequency
30 kHz to 83 kHz

Table of Contents

Description	Page	Description	Page
Table Of Contents	1	5.2.Electrical Block Diagram	22
Revision List	2	6. Mechanical Instructions	24
ECN History	3	7. Schematic Diagram	29
Important Safety Notice	4	7.1 Main Board	29
1.Monitor Specifications	5	7.2 Power Board	33
2.LCD Monitor Description	6	8. PCB Layout	35
3.Operation Instructions	7	8.1. Main Board	35
3.1.General Instructions	7	8.2. Power Board	38
3.2.Control Buttons	8	8.3. Key Board	41
3.3 Adjusting the Picture	10	9. Maintainability	42
4. Input/Output Specification	16	9.1.Equipments and Tools Requirement	42
4.1.Input Signal Connector	16	9.2.Trouble Shooting	43
4.2.Factory Preset Display Modes	17	10.White-Balance, Luminance adjustment	49
4.3.Power Supply Requirements	17	11.ISP Instruction	50
4.4.Panel Specification	18	12. Monitor Exploded View	54
4.5.Definition of Pixel Defects	19	13. Recommended Parts&BOM List	55
5.Block Diagram	20	14. Different Parts List	66
5.1.Software Flow Chart	20		

SAFETY NOTICE

ANY PERSON ATTEMPTING TO SERVICE THIS CHASSIS MUST FAMILIARIZE HIMSELF WITH THE CHASSIS AND BE AWARE OF THE NECESSARY SAFETY PRECAUTIONS TO BE USED WHEN SERVICING ELECTRONIC EQUIPMENT CONTAINING HIGH VOLTAGES.

CAUTION: USE A SEPARATE ISOLATION TRANSFOMER FOR THIS UNIT WHEN SERVICING

Revision List

Revision	Release Date	Revise history	TPV model
A00	Jul.-18-2007	Initial Release	T77GMRHFYWDRNN T77GMRHJYWDRNN T77GMRHKYWDRNN T77GMRHLYWDRNN T77GMRHMYWDLNN T77GMRHMYWDRNN
A01	Sep.-06-2007	Add new models in Item 14	T77GMRHJYWDRNC T77GMRHFYWDRNC T77GMRHMYWDLNC T77GMRHBYWDRNN T77GMRHBYWDRNC T77GMRHKYWDRNC T77HMRHKYWDRNN T77HMRHKYWDRNC
A02	Sep.-16-2007	Add new models in Item 14	T77HMRHFYWDRNC T77HMRHMYWDLNC T77HMRHLYWDRNC T77HMRHJYWDRNC T77HMRHMYWDRNC
A03	Oct.-28-2007	Add new models in Item 14	T77HMRHBYWDRNC
A04	Dec.-05-2007	Add “ECN History”	
A05	Mar.-05-2008	Add new models in Item 14	T77GMRHFYWDMNC T77GMRHMPWDMNC T77GMRHMYWDMNC T77GMRHMYWDNNC
A06	Jul.-05-2008	Add new models in Item 14	T77GMRHMYWDNNC
A07	Dec.-24-2008	Change Y value to Ymin (min luminance value） in item 10	ALL

ECN History

ECN No.	Change Description	Service Deposition	Cut-in date	MSR

Important Safety Notice

Proper service and repair is important to the safe, reliable operation of all AOC Company Equipment. The service procedures recommended by AOC and described in this service manual are effective methods of performing service operations. Some of these service operations require the use of tools specially designed for the purpose. The special tools should be used when and as recommended.

It is important to note that this manual contains various CAUTIONS and NOTICES which should be carefully read in order to minimize the risk of personal injury to service personnel. The possibility exists that improper service methods may damage the equipment. It is also important to understand that these CAUTIONS and NOTICES ARE NOT EXHAUSTIVE. AOC could not possibly know, evaluate and advise the service trade of all conceivable ways in which service might be done or of the possible hazardous consequences of each way. Consequently, AOC has not undertaken any such broad evaluation. Accordingly, a servicer who uses a service procedure or tool which is not recommended by AOC must first satisfy himself thoroughly that neither his safety nor the safe operation of the equipment will be jeopardized by the service method selected.
Hereafter throughout this manual, AOC Company will be referred to as AOC.

WARNING
Use of substitute replacement parts, which do not have the same, specified safety characteristics may create shock, fire, or other hazards.

Under no circumstances should the original design be modified or altered without written permission from AOC. AOC assumes no liability, express or implied, arising out of any unauthorized modification of design.

Servicer assumes all liability.

FOR PRODUCTS CONTAINING LASER:
DANGER-Invisible laser radiation when open. AVOID DIRECT EXPOSURE TO BEAM.
CAUTION-Use of controls or adjustments or performance of procedures other than those specified herein may result in hazardous radiation exposure.
CAUTION -The use of optical instruments with this product will increase eye hazard.

TO ENSURE THE CONTINUED RELIABILITY OF THIS PRODUCT, USE ONLY ORIGINAL MANUFACTURER'S REPLACEMENT PARTS, WHICH ARE LISTED WITH THEIR PART NUMBERS IN THE PARTS LIST SECTION OF THIS SERVICE MANUAL.

Take care during handling the LCD module with backlight unit
-Must mount the module using mounting holes arranged in four corners.
-Do not press on the panel, edge of the frame strongly or electric shock as this will result in damage to the screen.
-Do not scratch or press on the panel with any sharp objects, such as pencil or pen as this may result in damage to the panel.
-Protect the module from the ESD as it may damage the electronic circuit (C-MOS).
-Make certain that treatment person’s body is grounded through wristband.
-Do not leave the module in high temperature and in areas of high humidity for a long time.
-Avoid contact with water as it may a short circuit within the module.
-If the surface of panel becomes dirty, please wipe it off with a soft material. (Cleaning with a dirty or rough cloth may damage the panel.)

1. Monitor Specifications

LCD Panel	Screen type	Active matrix - TFT LCD
	Panel Type	LM171WX3-TLB1 KR ZBD LPL
	Size	17 inches (17-inch diagonal viewable image size)
	Pixel pitch	0.255 mm x 0.255 mm
	Viewable angle	Viewing angle 160° (vertical) typ, 160° (horizontal) typ(CR>10）
	Response time	8 ms typical (Black to White)
Input	Video	Analog RGB: 0.7 Volts +/-5%, 75 ohm input impedance
	Separate Sync	H/V TTL
	H-Frequency	30 kHz to 83 kHz (automatic)
	V-Frequency	50 Hz to 75 Hz
Display Colors		16.7M
Dot Clock		135MHz (Max.)
Max. Resolution		1440 x 900 at 60 Hz
Plug & Play		VESA DDC
EPA ENERGY STAR®	ON Mode	34 W (typical)
	OFF Mode	<1W
Input Connector		15-pin D-subminiature, blue connector
Maximum Screen Size		Horizontal : 367.2 mm(14.46 inches) Vertical: 229.5 mm(9.04 inches)
Power Source		100 to 240 VAC / 50-60 Hz / 0.6A (100V)& 0.35A(240V)Max.
Environmental Considerations		Operating Temp: 5° to 35°C Operating Humidity: 10% to 80% Storage Temp.: 0° to 60°C
Weight		Weight with packaging: 5.31 kg (11.68 lb) Monitor (Stand and Head): 3.86 kg (8.49 lb) Monitor Flat panel only (VESA Mode): 2.70 kg (5.95 lb)

2. LCD Monitor Description

The LCD monitor will contain a main board, power board, key board, which house the flat panel control logic, brightness control logic and DDC.

The power board will provide AC to DC Inverter voltage to drive the backlight of panel and the main board chips each voltage.

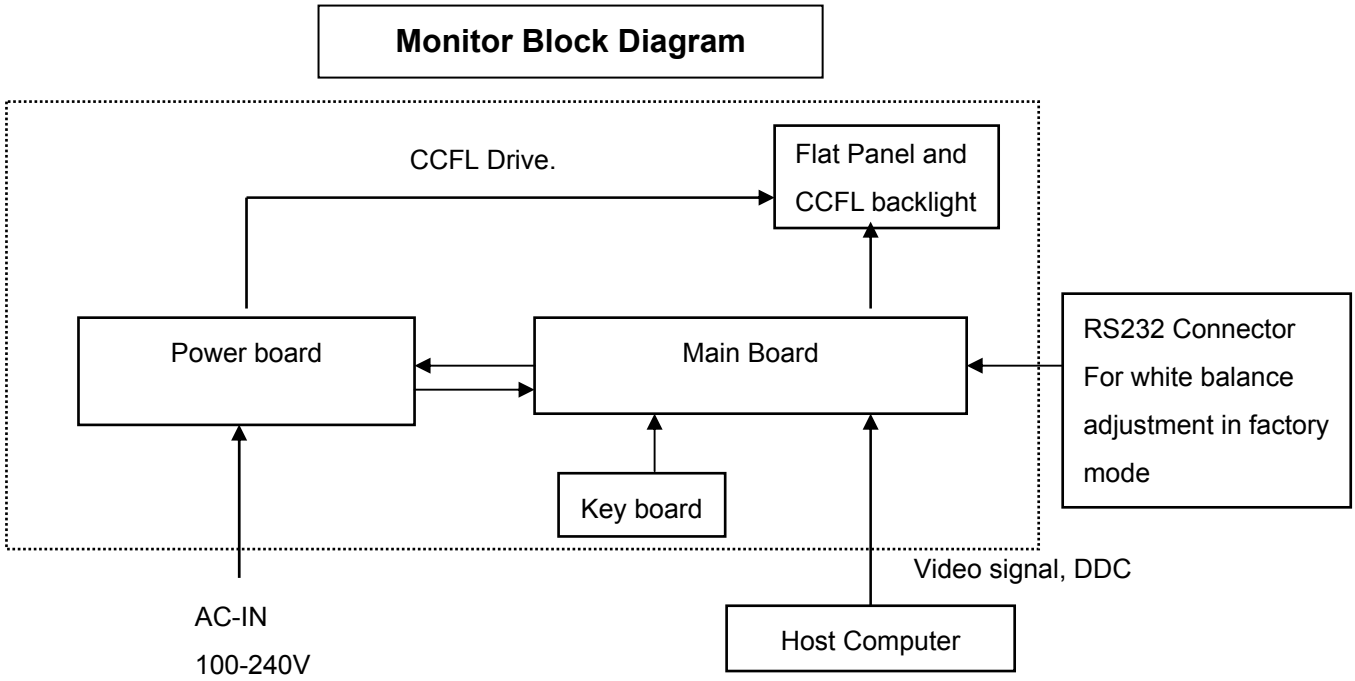

3. Operation instructions

3.1 General Instructions

1. With the menu off, press the **MENU** button to open the OSD system and display the main features menu.

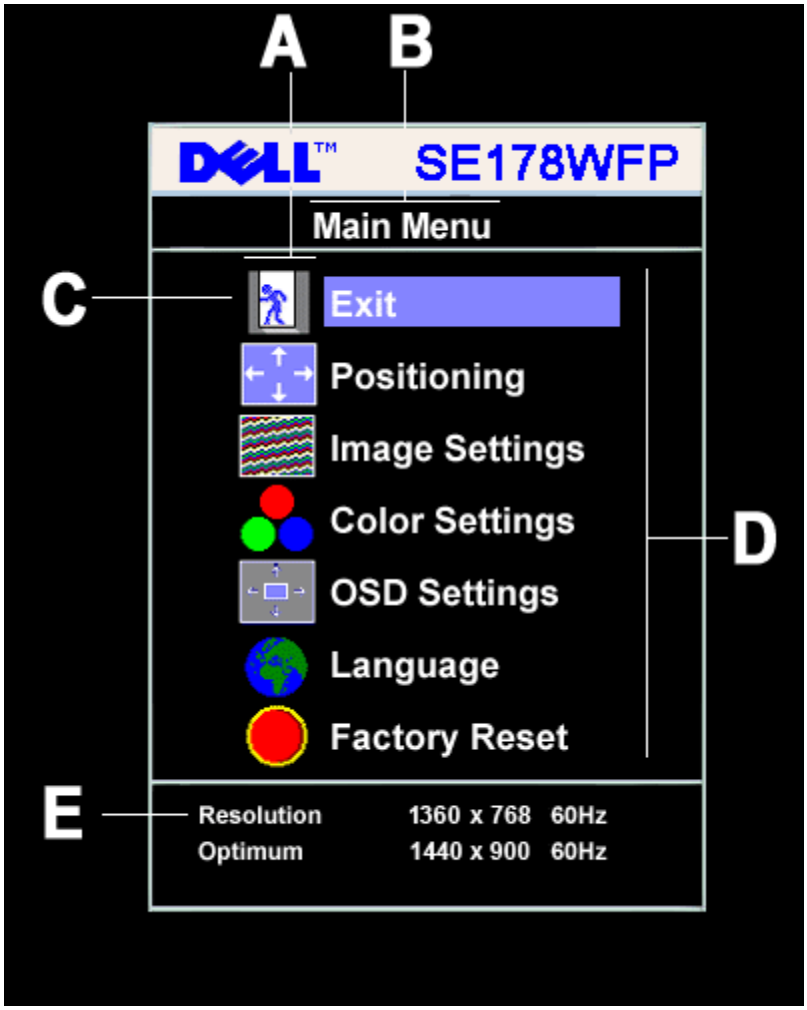

A	Function icons	**B**	Main Menu	**C**	Menu icon
D	Sub-Menu name	**E**	Resolution		

2. Press the - and + buttons to move between the function icons. As you move from one icon to another, the function name is highlighted to reflect the function or group of functions (sub-menus) represented by that icon. See the table below for a complete list of all the functions available for the monitor.

3. Press the **MENU** button once to activate the highlighted function. Press -/+ to select the desired parameter, press menu to enter the slidebar, then use the - and + buttons, according to the indicators on the menu, to make your changes.

4. Press the **MENU** button once to return to the main menu to select another function or press the **MENU** button two or three times to exit from the OSD.

3.2 Control Buttons

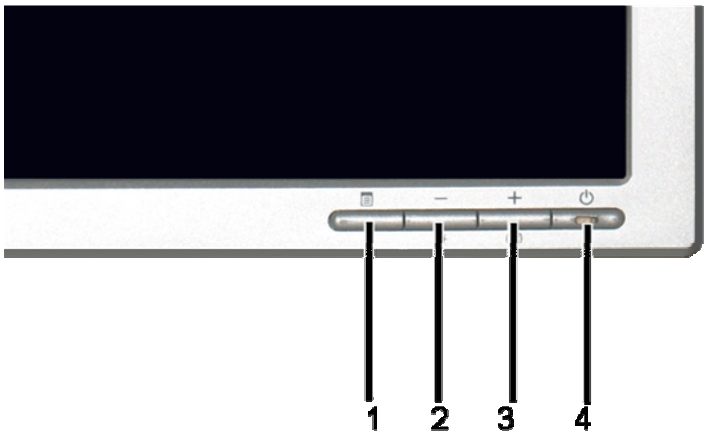

1	Menu selection button
2	Brightness Contrast / Down(-) button
3	Auto-Adjust / Up(+) button
4	Power On/Off button with LED indicator

1	**MENU**	The 'MENU' button is used to open the on-screen display (OSD), select function icons, exit from menus and sub-menus, and to exit the OSD. See Accessing the Menu System
2	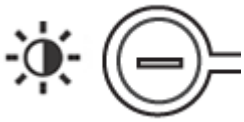 **Brightness/Contrast Hot Key**	Use this button for direct access to the 'Brightness' and 'Contrast' control menu.
2,3	**- and + buttons**	Use these buttons to adjust (decrease/increase ranges) items in the OSD. **NOTE:** You can activate automatic scroll feature by pressing and holding either + or - button.
3	**Auto Adjust**	Use this button to activate automatic setup and adjustment. The following dialog will appear on screen as the monitor self-adjusts to the current input:

		Auto Adjust In Progress Auto Adjustment button allows the monitor to self-adjust to the incoming video signal. After using 'Auto Adjustment', you can further tune your monitor by using the 'Pixel Clock' and 'Phase' controls in the OSD. **NOTE**: Auto Adjust will not occur if you press the button while there are no active video input signals, or attached cables.
4	**Power Button and Indicator**	The green LED indicates the monitor is on and fully functional. An amber LED indicates DPMS power save mode. The Power button turns the monitor on and off.

On Screen Menu/Display (OSD)

Direct-Access Functions

Function	**Adjustment Method**
Auto adjustment	Use this button to activate automatic setup and adjustment. The following dialog will appear on screen as the monitor self-adjusts to the current input: Auto Adjust In Progress Auto Adjustment button allows the monitor to self-adjust to the incoming video signal. After using 'Auto Adjustment', you can further tune your monitor by using the 'Pixel Clock' and 'Phase' controls in the OSD. **NOTE**: Auto Adjust will not occur if you press the button while there are no active video input signals, or attached cables.
Brightness / Contrast 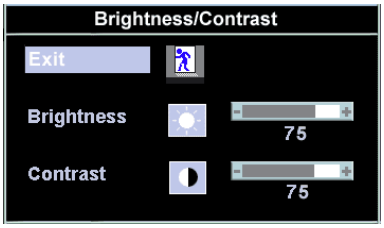	With the menu off, press button to display the 'Brightness' and 'Contrast' adjustment menu. The 'Brightness' function adjusts the luminance of the flat panel. Adjust 'Brightness' first, and then adjust 'Contrast' only if further adjustment is necessary. "+" increase 'brightness' " - "decrease 'brightness'

	The 'Contrast' function adjusts the degree of difference between darkness and lightness on the display screen. "+" increase the 'contrast' "-" decrease the 'contrast'

3.3 Adjusting the Picture

Icon	Menu and Submenus	Description
	Exit	This is used to exit out of the Main Menu.
	Positioning: **Horizontal** **Vertical**	'Positioning' moves the viewing area around on the monitor screen. When making changes to either the **Horizontal** or **Vertical** settings, no changes occur to the size of the viewing area; the image gets shifted based on what you select. Minimum is '0' (-). Maximum is '100' (+). 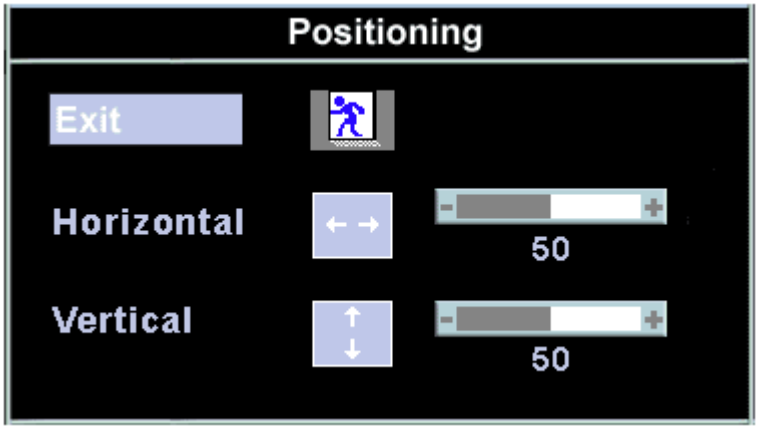
	Image settings: **Auto Adjust** **Pixel Clock**	Even though your computer system can recognize your new flat panel monitor on startup, the 'Auto Adjustment' function will optimize the display settings for use with your particular setup. **NOTE**: In most cases, 'Auto Adjust' produces the best image for your configuration; you can directly access this function via Auto Adjustment hotkey. The **Phase** and **Pixel Clock** adjustments allow you to more closely adjust your monitor to your preference. Select Image Settings in the main OSD to access

	Phase	these settings. Use the - and + buttons to adjust interference. Minimum: 0 ~ Maximum: 100 If satisfactory results are not obtained using the **Phase** adjustment, use the **Pixel Clock** adjustment and then use **Phase** again. 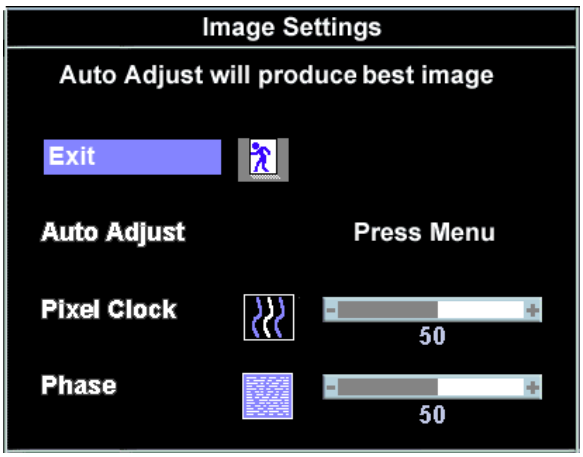 **NOTE**: This function may change the width of the display image. Use the 'Horizontal' function of the 'Position' menu to center the display image on the screen.
	Color Settings	Adjusts the color temperature and saturation. 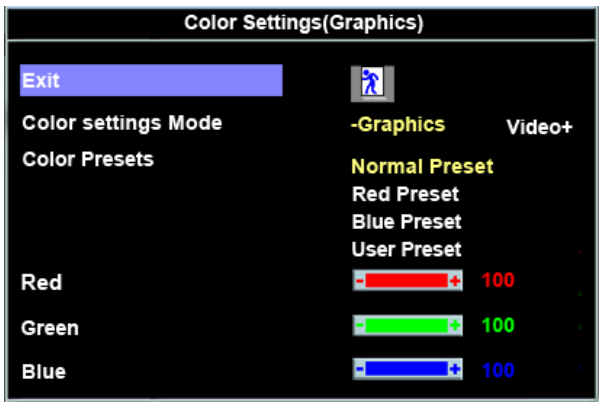 Color Settings adjust the color temperature. Color Settings has the following options: Color Management : Color Settings Mode : You can choose between a Graphics and a Video mode. If your computer is connected to your monitor, choose Video. Color Presets: You can choose different color presets for different viewing modes. As soon as choose Graphics, you can choose Normal Preset, Red Preset, Blue Preset or User Preset. Select Red Preset for a warm color. Select Blue Preset for a cool color.

		You can adjust the monitor color using User Preset, R, G, B.Normal Preset mean color temperature 6500K. Select Blue Preset for a bluish tint. This color setting is used for text based applications (spreadsheets, programming, text editors, etc.). Select Red Preset for a reddish tint.This color setting is used for color-intensive applications (photograph image editing, multimedia, movies, etc.). Select Normal Preset for default color settings. This setting is also the “sRGB” standard default color space. User Preset: Use the plus and minus buttons to increase or decrease each of the three colors (R, G, B) independently, in single digit increments, from 0 to 100. There are three video modes: Theater Preset, Sports Preset, and Nature Preset. 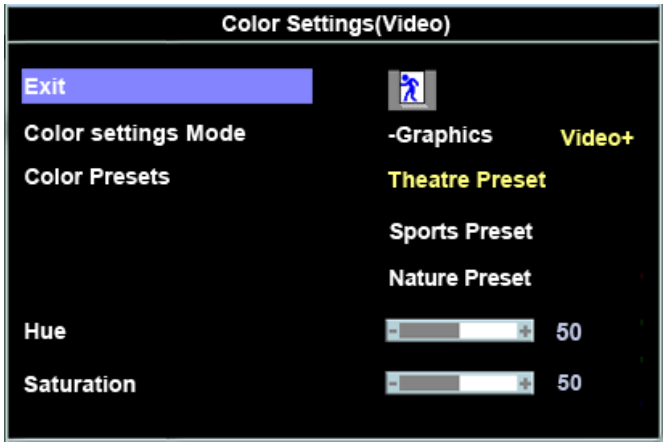 Select Theater Preset for playing a movie. Select Sports Preset for viewing sports. Select Nature Preset for general viewing. For general picture or web or watch TV, choose Nature Preset. User can adjust the Hue (Tint)/Saturation based on the preference. NOTE: 'Color temperature' is a measure of the 'warmth' of the image colors (red/green/blue). The two available presets ('Blue' and 'Red') favor blue and red accordingly. Select each one to see how each range suits your eye; or utilize the 'User Preset' option to customize the color settings to your exact choice.
	OSD Settings:	Each time the OSD opens, it displays in the same location on the screen. 'OSD Settings' (horizontal/vertical) provides control over this location.
	Horizontal Position	**-** and + buttons move OSD to the left and right.
	Vertical Position	**-** and + buttons move OSD down and up.
	OSD Hold Time	The OSD stays active for as long as it is in use. 'OSD Hold Time': Sets the length of time the OSD will remain active after the last time you pressed a button. Use the **-** and + buttons to adjust the slider in 5 second increments, from 5 to 60 seconds

OSD Lock

NOTE: Default 'OSD hold time' is 20 seconds.

Controls user access to adjustments. When 'Yes' (+) is selected, no user adjustments are allowed. All buttons, except Menu, are locked.

All buttons can be locked or unlocked. Press the 'Menu' button for over 15 seconds to unlock the OSD menu.

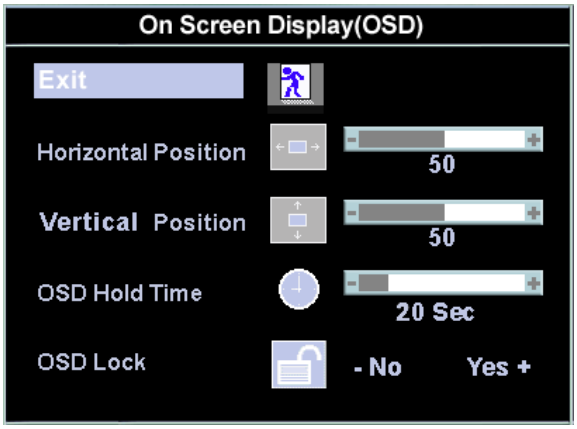

NOTE: When the OSD is locked, pressing the 'Menu' button will take the user directly to the 'OSD settings' menu, with 'OSD Lock' preselected on entry. Select 'No'(-) to unlock and allow user access to all applicable settings.

Language

Language sets the OSD to display in one of five languages (English, Español, Français, Deutsch, and Japanese).

NOTE: The language chosen affects only the language of the OSD. It has no effect on any software running on the computer.

Factory Reset:

Factory Reset returns the settings to the factory preset values for the selected group of functions.

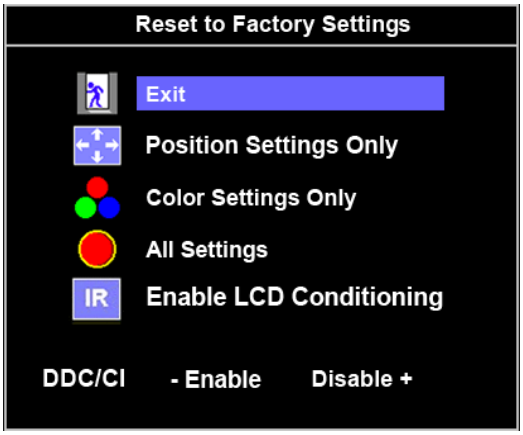

Exit is used to exit out of **Factory Reset** menu.

For **All settings**, all user adjustable settings are reset at one time except **Language settings**.

IR — This feature will help reduce minor cases of image retention.

Enable LCD Conditioning: If an image appears to be stuck on the monitor, select **LCD Conditioning** to help eliminate any image retention. Using the LCD Conditioning feature may take several hours. Severe cases of image retention are known as burn-in, the LCD Conditioning feature does not remove burn-in.

NOTE: Use LCD Conditioning only when you experience a problem with image retention.

Below warning message appears once user select “Enable LCD Conditioning”:

NOTE: Press any button on the monitor to terminate LCD Conditioning at any time.

DDC/CI (Display Data Channel/Command Interface) allows you to adjust the monitor parameters (brightness, color, balance, etc.) via software applications on your PC.

Select **Disable** to disable this feature.
For best user experience and optimum performance of your monitor, keep this feature enabled.

NOTE: If user select 'disable' for DDC/CI, the warning message will appear on screen. Then user can select Yes or No according to need.

Automatic Save

With the OSD open, if you make an adjustment and then either proceed to another menu, or exit the OSD, the monitor automatically saves any adjustments you have made. If you make an adjustment and then wait for the OSD to disappear the adjustment will also be saved.

OSD Warning Messages

A warning message may appear on the screen indicating that the monitor is out of sync.

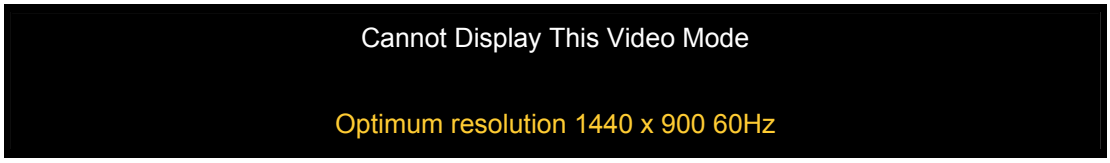

This means that the monitor cannot synchronize with the signal that it is receiving from the computer. Either the signal is too high or too low for the monitor to use. See Specifications for the Horizontal and Vertical frequency ranges addressable by this monitor. Recommended mode is 1440 X 900 @ 60Hz.

NOTE: The floating 'Dell - self-test Feature Check' dialog appears on the screen if the monitor cannot sense a video signal.

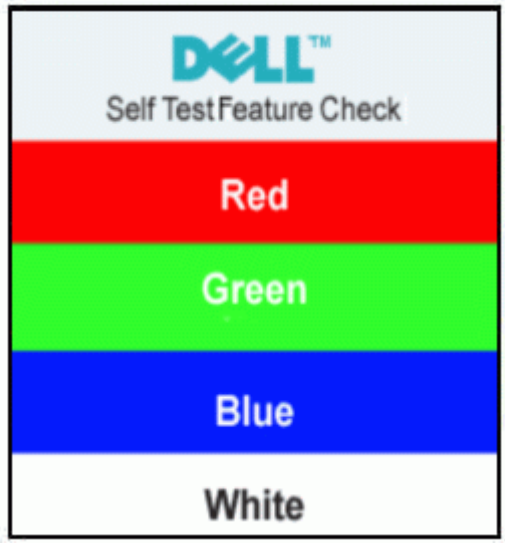

Occasionally, no warning message appears, but the screen is blank. This could also indicate that the monitor is not synchronizing with the computer. See Troubleshooting for more information.

4. Input/Output Specification

4.1 Input Signal Connector

VGA Connector:

Pin No.	Description	Pin No.	Description
1	Video-Red	9	Computer 5V/3.3V
2	Video-Green	10	GND-sync
3	Video-Blue	11	GND
4	GND	12	DDC data
5	Self-test	13	H-sync
6	GND-R	14	V-sync
7	GND-G	15	DDC clock
8	GND-B		

VGA Connector layout

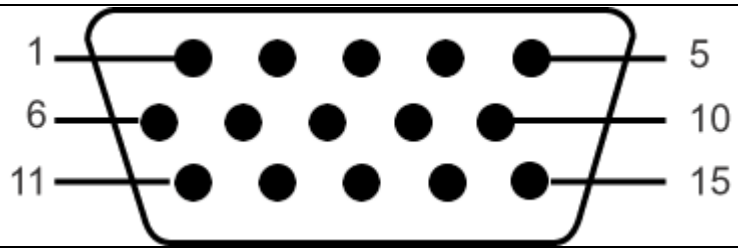

4.2 Factory Preset Display Modes

Display Mode	Horizontal Frequency (kHz)	Vertical Frequency (Hz)	Pixel Clock (MHz)	Sync Polarity (Horizontal/Vertical)
VGA, 720 x 400	31.5	70.1	28.3	-/+
VGA, 640 x 480	31.5	60.0	25.2	-/-
VESA, 640 x 480	37.5	75.0	31.5	-/-
VESA, 800 x 600	37.9	60.3	40.0	+/+
VESA, 800 x 600	46.9	75.0	49.5	-/+
VESA, 1024 x 768	48.4	60.0	65.0	-/-
VESA, 1024 x 768	60.0	75.0	78.8	+/+
VESA, 1152 x 864	67.5	75.0	108.0	+/+
VESA, 1280 x 1024	64.0	60.0	108.0	+/+
VESA, 1280 x 1024	80.0	75.0	135.0	+/+
VESA, 1440 x 900	55.935	60.0	106.5	-/+

4.3 Power Supply Requirements

A/C Line voltage range	: 100 V ~ 240 V± 10 %
A/C Line frequency range	: 50 ± 3Hz, 60 ± 3Hz
Input Voltage transients	: 280 volts AC for 10 sec @40℃
Current	: 0.6A max. at 100V, 0.35A max. at 240 V
Peak surge current	: < 60A peak at 240 VAC and cold starting : < 30A peak at 120VAC and cold starting
Leakage current	: < 3.5mA
Power line surge	: No advance effects (no loss of information or defect) with a maximum of 1 half-wave missing per second

4.4 Panel Specification

LM171WX3-TLB1 KR ZBD LPL

4.4.1 Display Characteristics

Active Screen Size	17.1 inches(43.3019cm) diagonal (Aspect ratio 16:10)
Outline Dimension	389.2(H)x254.5(V)x11.5(D) mm (Typ.)
Pixel Pitch	0.255mm x 0.255mm
Pixel Format	1440 horiz. By 900 vert. Pixels RGB strip arrangement
Color Depth	16.7M colors
Luminance, White	250 cd/m^2 (Center 1 points Typ.)
Viewing Angle (CR>10)	R/L 160(Typ.), U/D 160(Typ)
Power Consumption	Total 12.92 Watt(Typ.) (2.6 Watt@V_{LCD}, 10.32 Watt@250cd/[Lamp=8mA])
Weight	1360 g (Typ.)
Display Operating Mode	Transmissive mode, normally white
Surface Treatment	Glare treatment of the front polarizer

4.4.2 Optical Characteristics

Ta= 25±2°C, V_{LCD}=5.0V, fV=60Hz, Dclk=106.5MHz, ILamp=8mA

Parameter		Symbol	Values			Units	Notes
			Min	Typ	Max		
Contrast Ratio		CR	500	800	-		1
Surface Luminance, white		L_{WH}	200	250	-	cd/m^2	2
Luminance Variation		δ_{WHITE}	75			%	3
Response Time	Rise Time	Tr_R	-	2	5	ms	4
	Decay Time	Tr_D	-	6	11	ms	
Color Coordinates [CIE1931]	RED	Rx	Typ -0.03	0.610	Typ +0.03		
		Ry		0.339			
	GREEN	Gx		0.304			
		Gy		0.594			
	BLUE	Bx		0.150			
		By		0.086			
	WHITE	Wx		0.313			
		Wy		0.329			
Viewing Angle (CR>10)				160/160			
	x axis, right(ϕ=0°)	θr	70	80	-	degree	5
	x axis, left (ϕ=180°)	θl	70	80	-		
	y axis, up (ϕ=90°)	θu	60	75	-		
	y axis, down (ϕ=270°)	θd	70	85	-		
Gray Scale			1.9	2.2	2.5		6
Cross talk					1.5	%	Fig 5

4.5 Definition of Pixel Defects

4.5.1 Inspection environment conditions:

- ◆ Room temperature: 20 ~ 25 C
- ◆ Humidity: 65 ± 5% RH.
- ◆ Illumination: Fluorescent light (Day-Light Type) display surface illumination to be 300 ~ 700 Lux. (standard 500Lux.)
- ◆ To be a distance about 35±5 cm in front of LCD unit, viewing line should be perpendicular to the surface of the module judge the visual appearance with human's eyes. (Stand up the panel for judge and ±30° viewing edge will be allowed)
- ◆ Take off the protection film of polarizer while judging the display area.
- ◆ If there is any question while judging, check the panel again in operating mode.

4.5.2. Display Defect Requirements

1. Max. 0 red, green or blue bright dots (sub-pixels), max. 0 green dots, max. 0 joined bright dot.

2. Max. 4 black dots. Max. 2 joined (2 adjacent) black dots, no defect with 3 adjacent black dots. Min. distance between 2 black dots: 10mm.Black dots are tested with full screen white (R.G.B. = 100,100,100)/ red (R.G.B. = 100,0,0)/green (R.G.B. = 0,100,0)/blue (R.G.B. = 0,0,100) pattern.

3. Total amount of Dot Defects are 5 Max. (Including bright and dark dot defects)

5. Block Diagram

5.1 Software Flow Chart

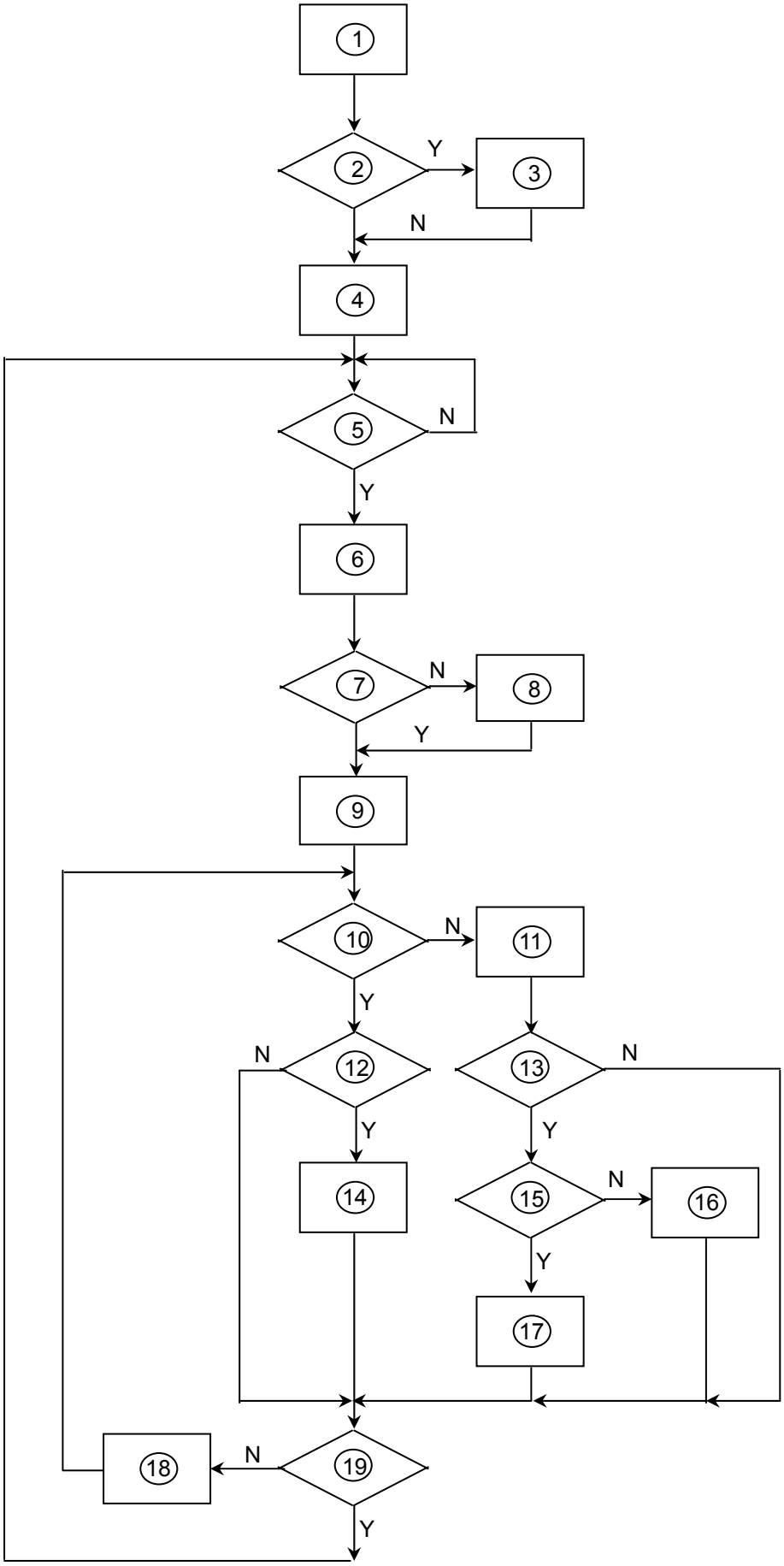

1) MCU Initializes.
2) Is the EEprom blank?
3) Program the EEprom by default values.
4) Get the PWM value of brightness from EEprom.
5) Is the power key pressed?
6) Clear all global flags.
7) Are the AUTO and SELECT keys pressed?
8) Enter factory mode.
9) Save the power key status into EEprom. Turn on the LED and set it to green color. Scalar initializes.
10) In standby mode?
11) Update the lifetime of back light.
12) Check the analog port, are there any signals coming?
13) Does the scalar send out an interrupt request?
14) Wake up the scalar.
15) Are there any signals coming from analog port?
16) Display "No connection Check Signal Cable" message. And go into standby mode after the message disappears.
17) Program the scalar to be able to show the coming mode.
18) Process the OSD display.
19) Read the keyboard. Is the power key pressed?

5.2 Electrical Block Diagram

5.2.1 Main Board

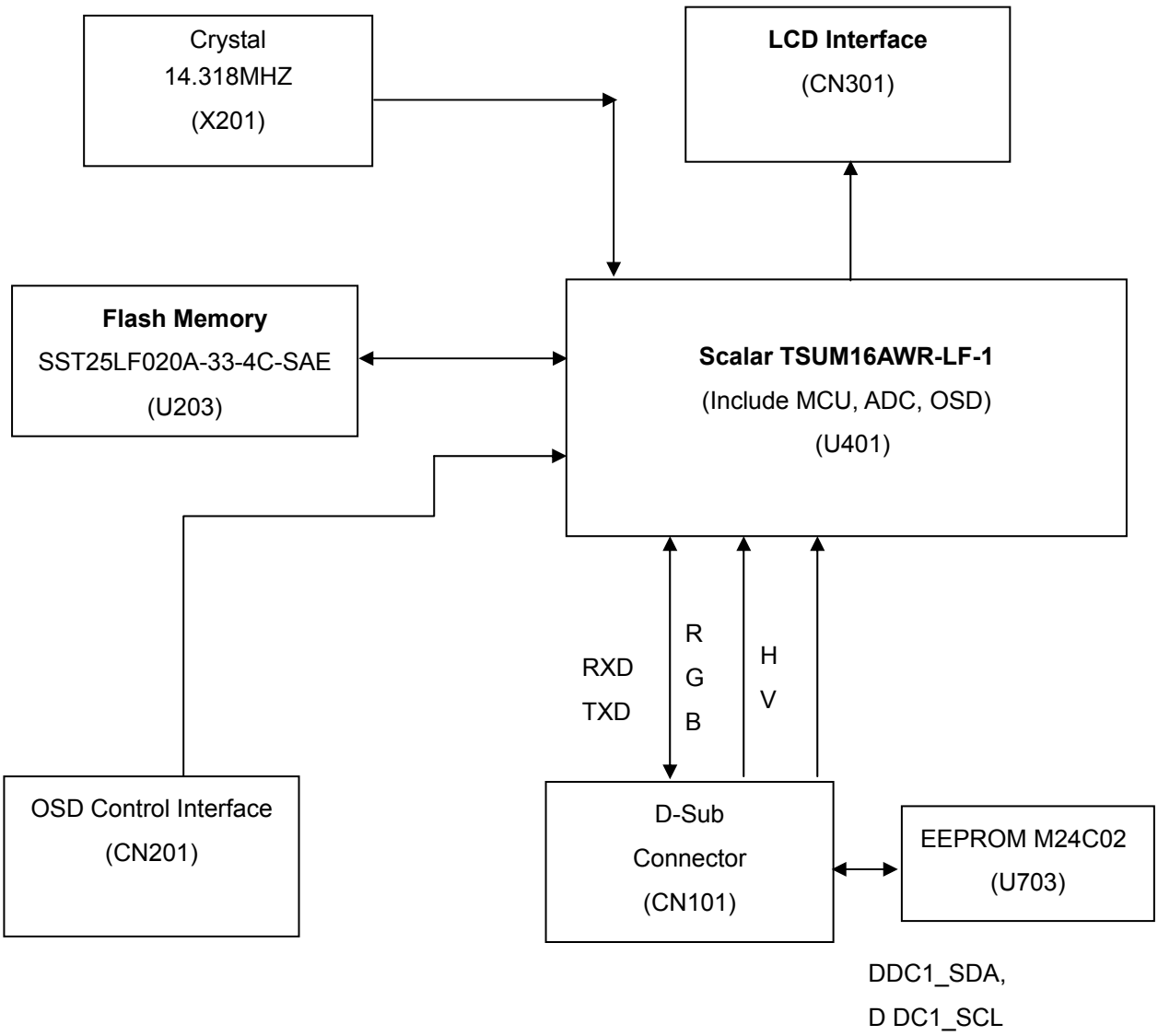

5.2.2 Inverter and Power Board

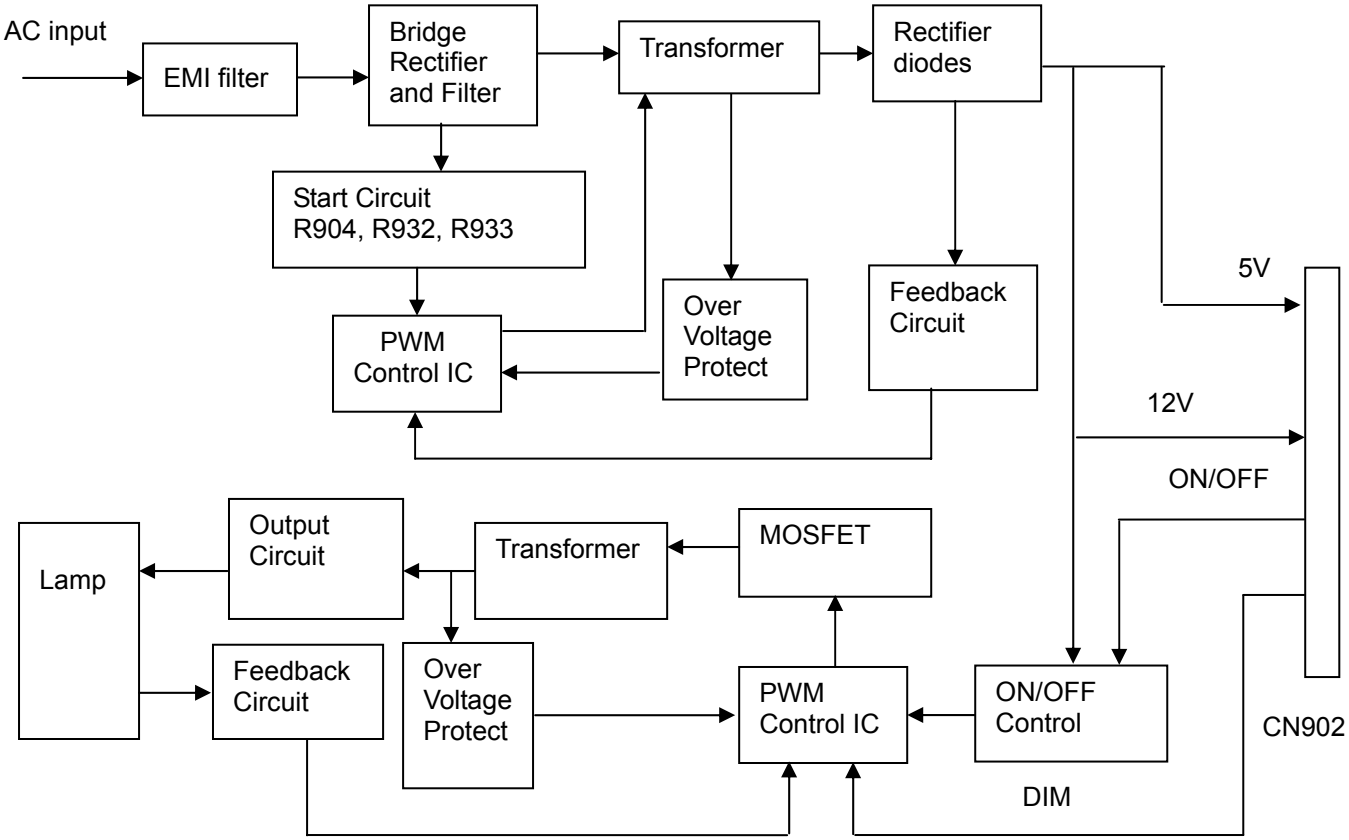

6. Mechanical Instructions

Tools: 2 Power screwdrivers (φ=5mm,L=60mm); 1 small cross screwdriver; turnbuckle driver;

Setting: Power screwdriver torque A=11 kgF. Cm; torque B=6 kgF. Cm

Note: Firstly, put the monitor on a soft, flat and clean surface, wear gloves.

Fig	Remark
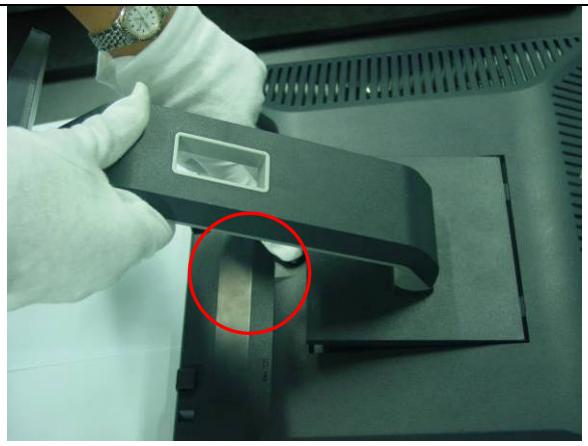	**Remove stand:** 1. Rotate the stand to allow access to the stand release button. 2. Press the Stand release button and lift up the Stand and away from the monitor.
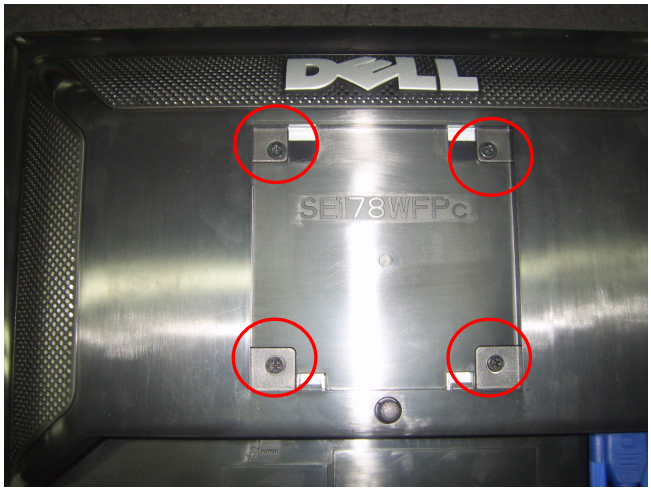	**Remove rear cover** : 1. Remove the 4 screws by torque A
	2. Pry the monitor up then find out the hooks' position, use the tool (like the picture or other card) to insert into the gap of bezel and rear cover.

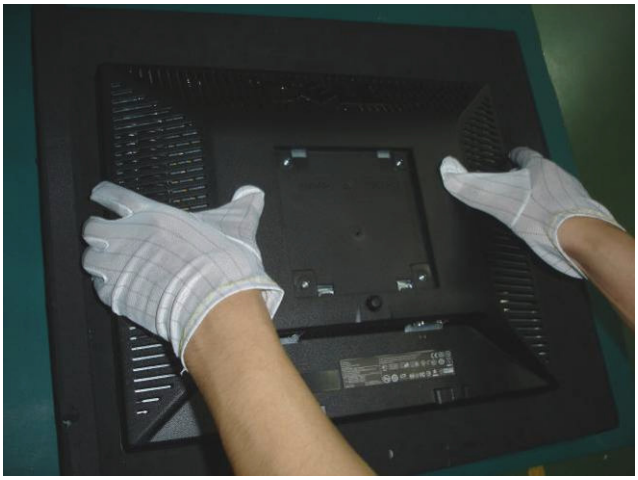

3. Turn over the monitor as the Fig, hold the rear cover, and then slightly remove it.

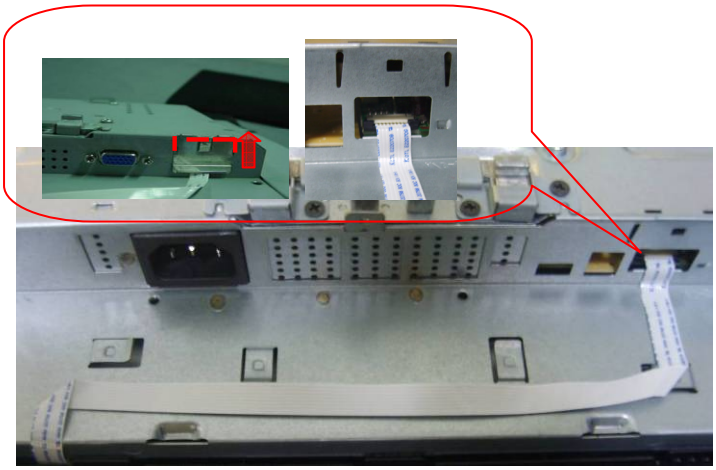

Remove the small shield:
Remove the small shield as the arrowhead direction, disconnects the keyboard connector, and then remove the bezel.

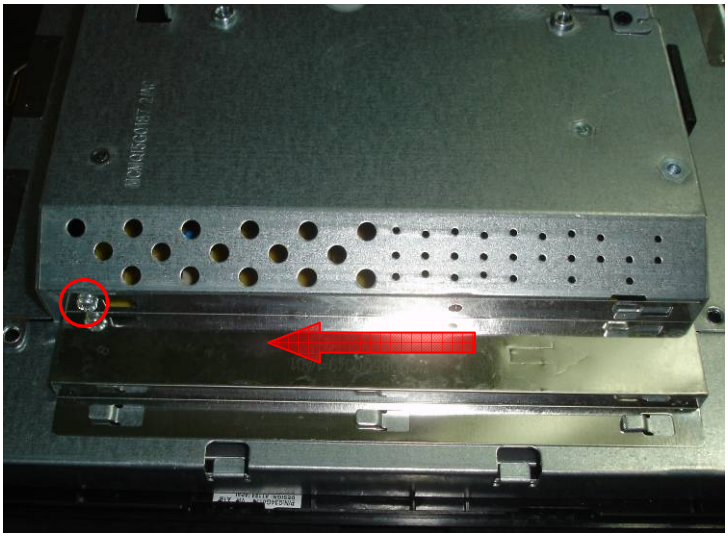

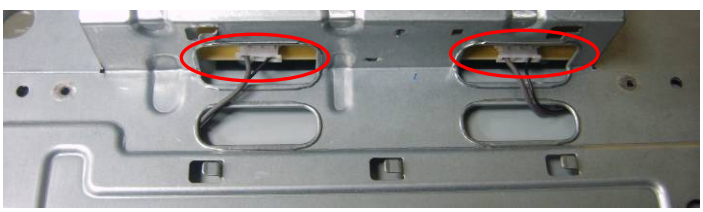

Remove the shield :
1. Remove the screw by Torque B or by manual and remove the small shield

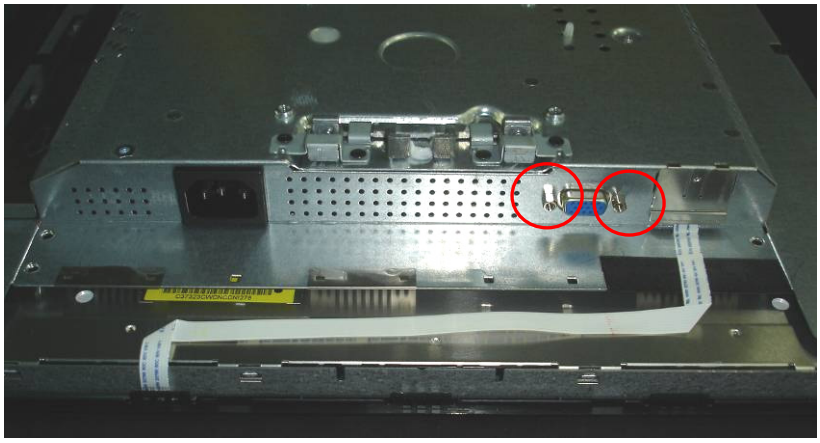	Remove the two screws by Torque B.
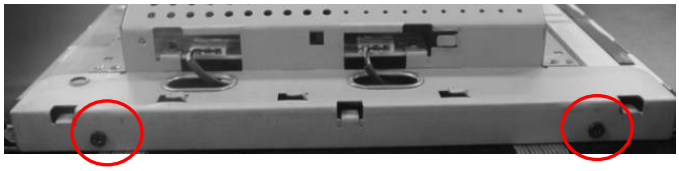 	**Remove the main frame:** Remove the 4 screws by manual or torque = 3kgF.Cm and remove the main frame
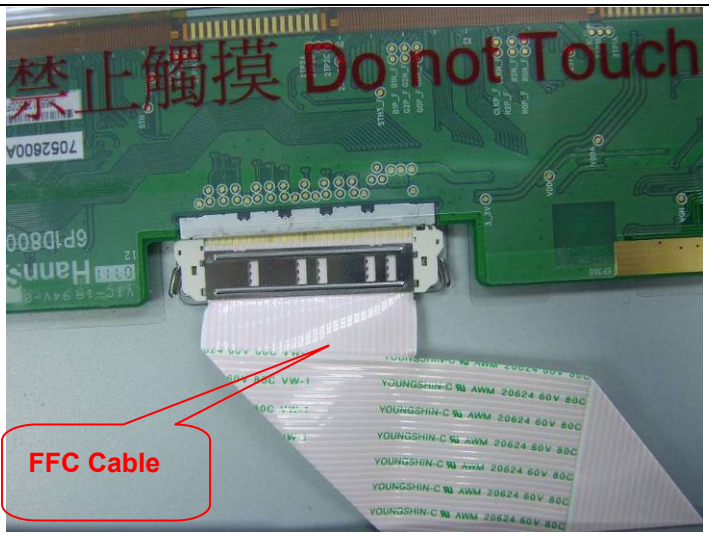	Install: Fix the FFC connector as the figure. Note: Make LVDS connector's metal side adown .

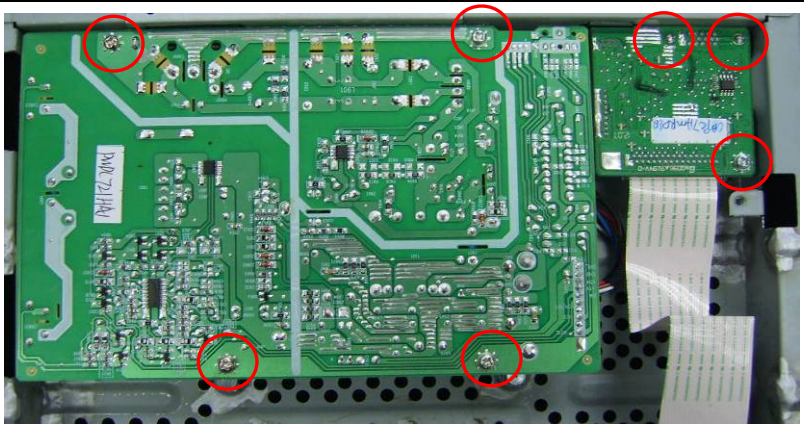

Remove the Boards:

Remove the seven screws by Torque B and remove the Power Board and Main Board.

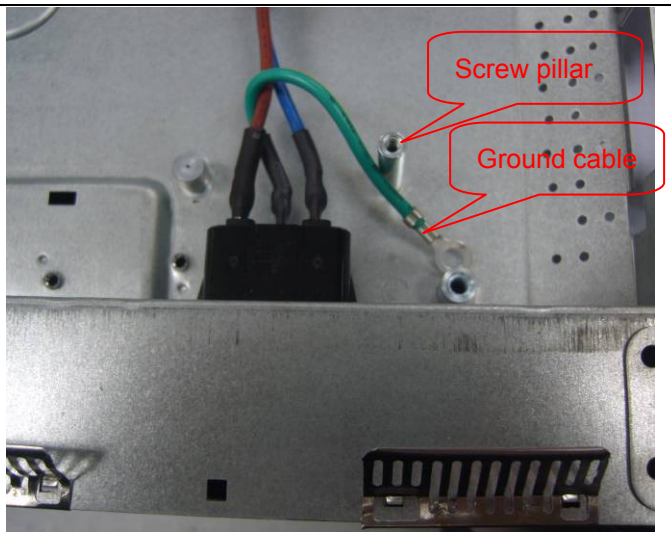

Install:

The ground cable should be laid above the other two cables and below the screw pillar.

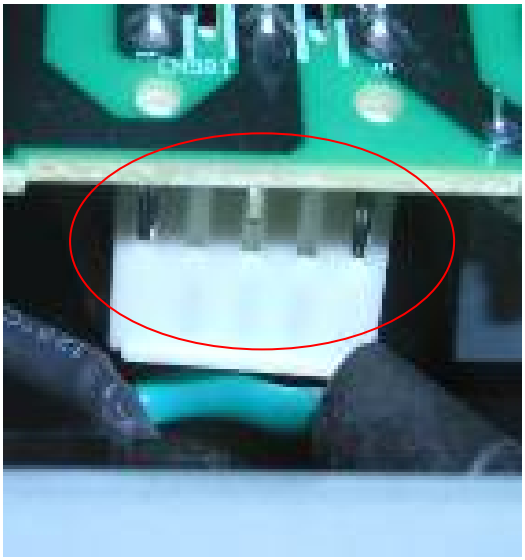

Install:

Note: The pins can't touch the blue and purple lines.

	The end
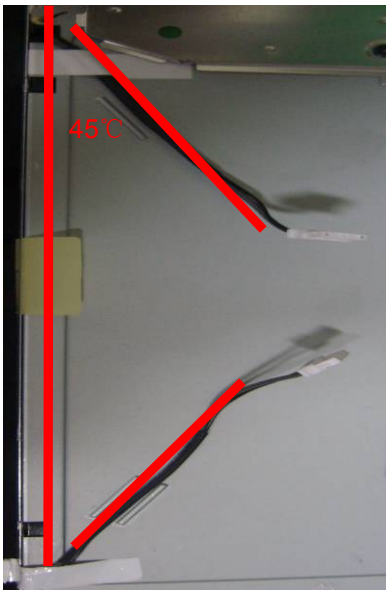	Install: The angle between CCFL line and vertical direction should be 45 degree.

7. Schematic Diagram

7.1 Main Board

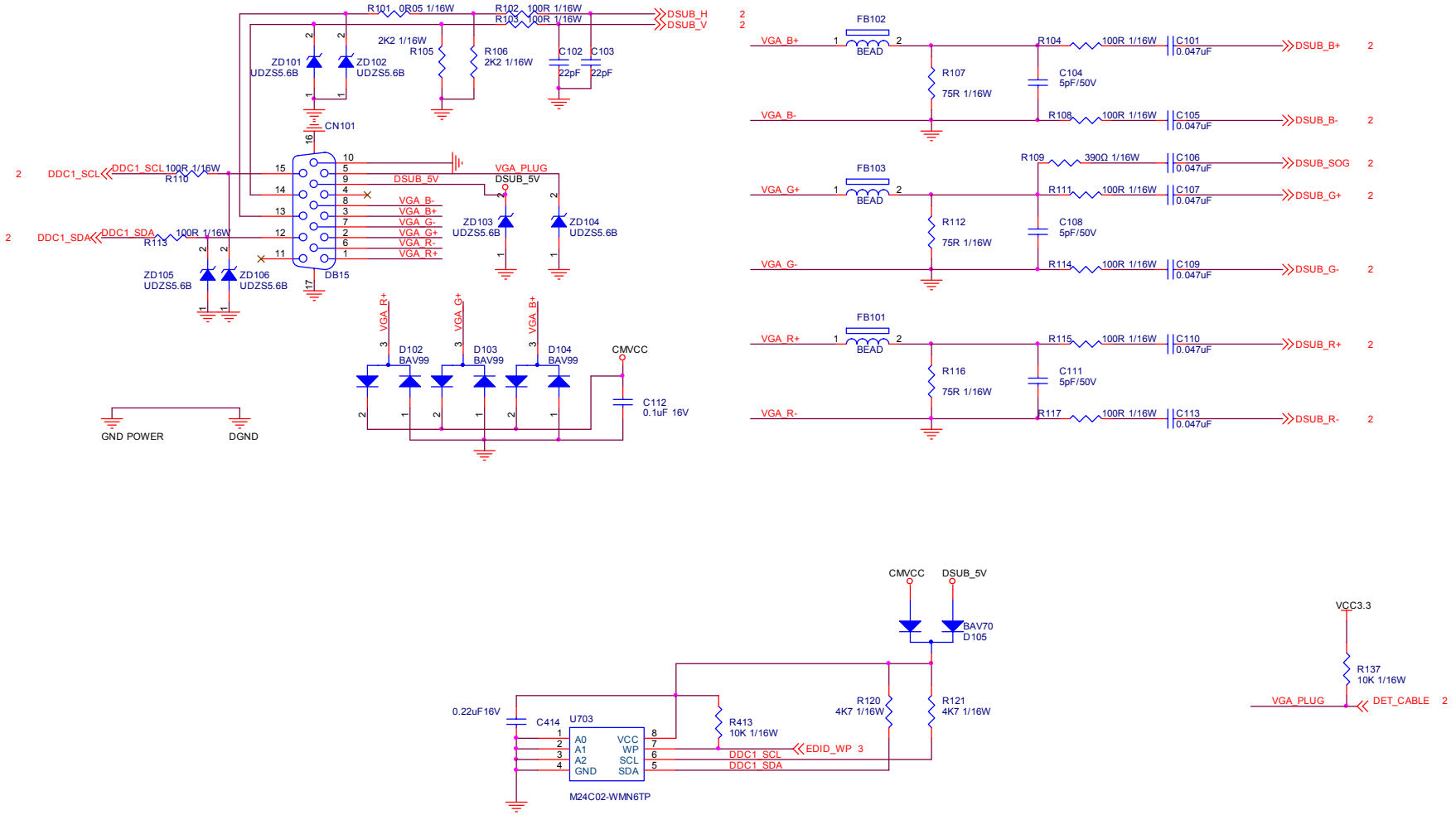

TPV (Top Victory) Electronics Co., Ltd.		
Title: INPUT		
Size: B	Document Number: G2659-1-DEL-X-2-070619	Rev: A
Date: Tuesday, June 19, 2007	Sheet 1 of 5	

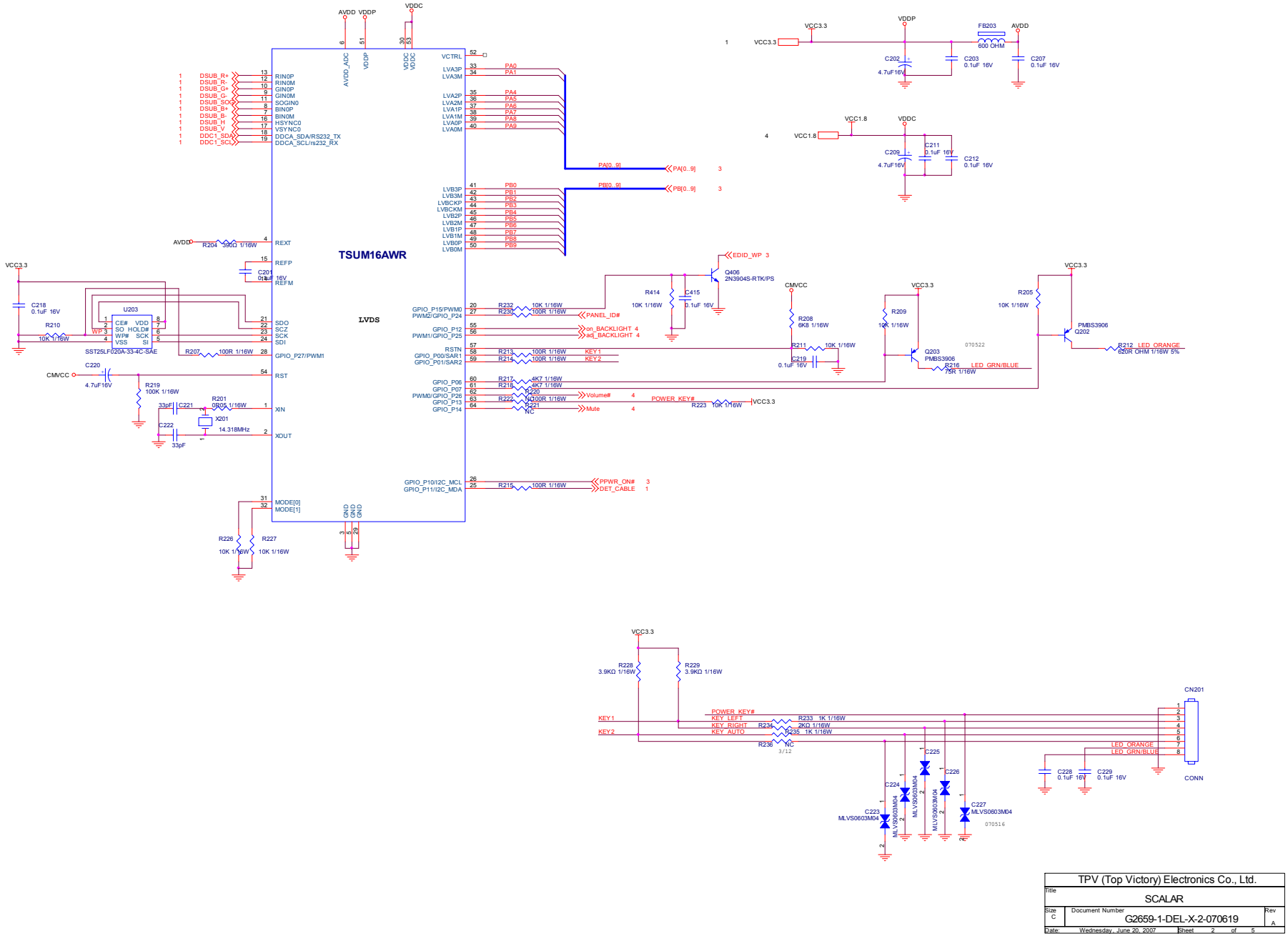

TPV (Top Victory) Electronics Co., Ltd.		
Title	SCALAR	
Size C	Document Number G2659-1-DEL-X-2-070619	Rev A
Date: Wednesday, June 20, 2007	Sheet 2 of 5	

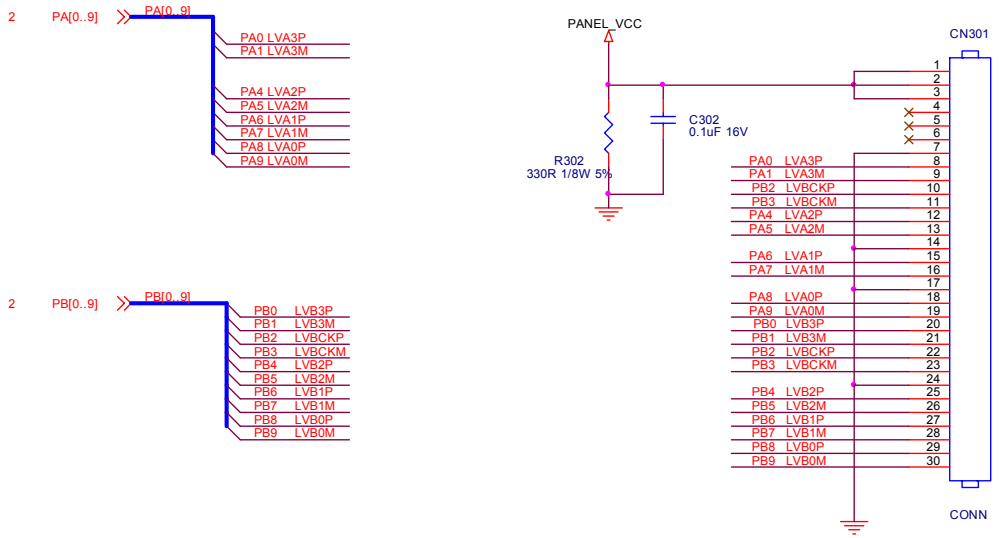

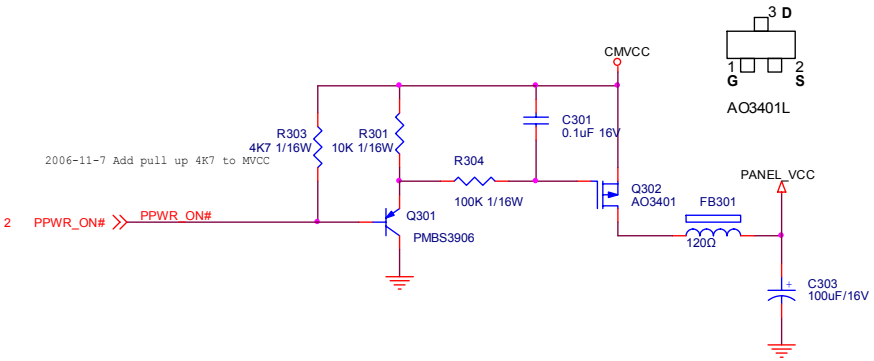

TPV (Top Victory) Electronics Co., Ltd.		
Title: OUTPUT		
Size: B	Document Number: G2659-1-DEL-X-2-070619	Rev: A
Date: Tuesday, June 19, 2007	Sheet 3 of 5	

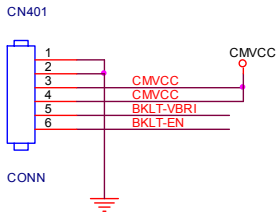

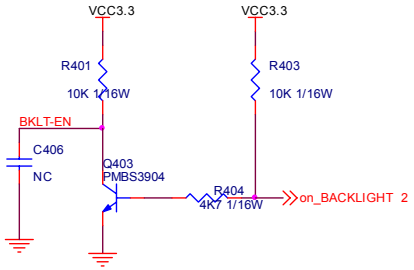

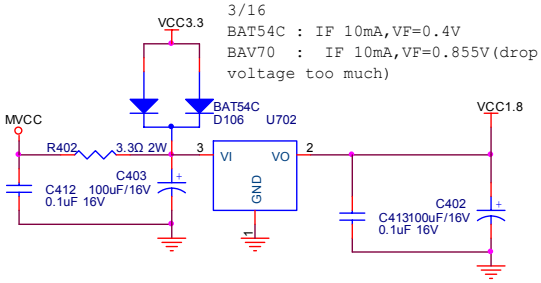

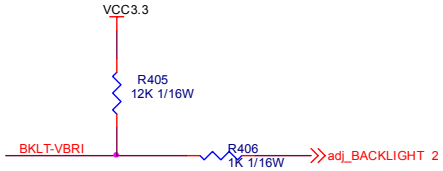

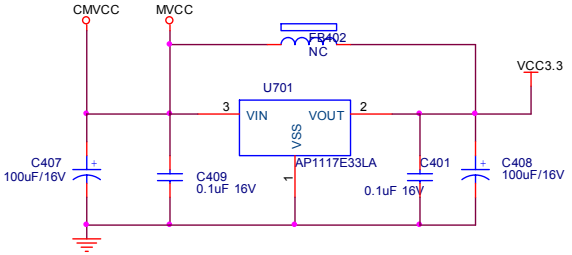

TPV (Top Victory) Electronics Co., Ltd.			
Title: Power			
Size: B	Document Number: G2659-1-DEL-X-2-070619		Rev: A
Date: Wednesday, June 20, 2007	Sheet 4 of 5		

7.2 Power Board

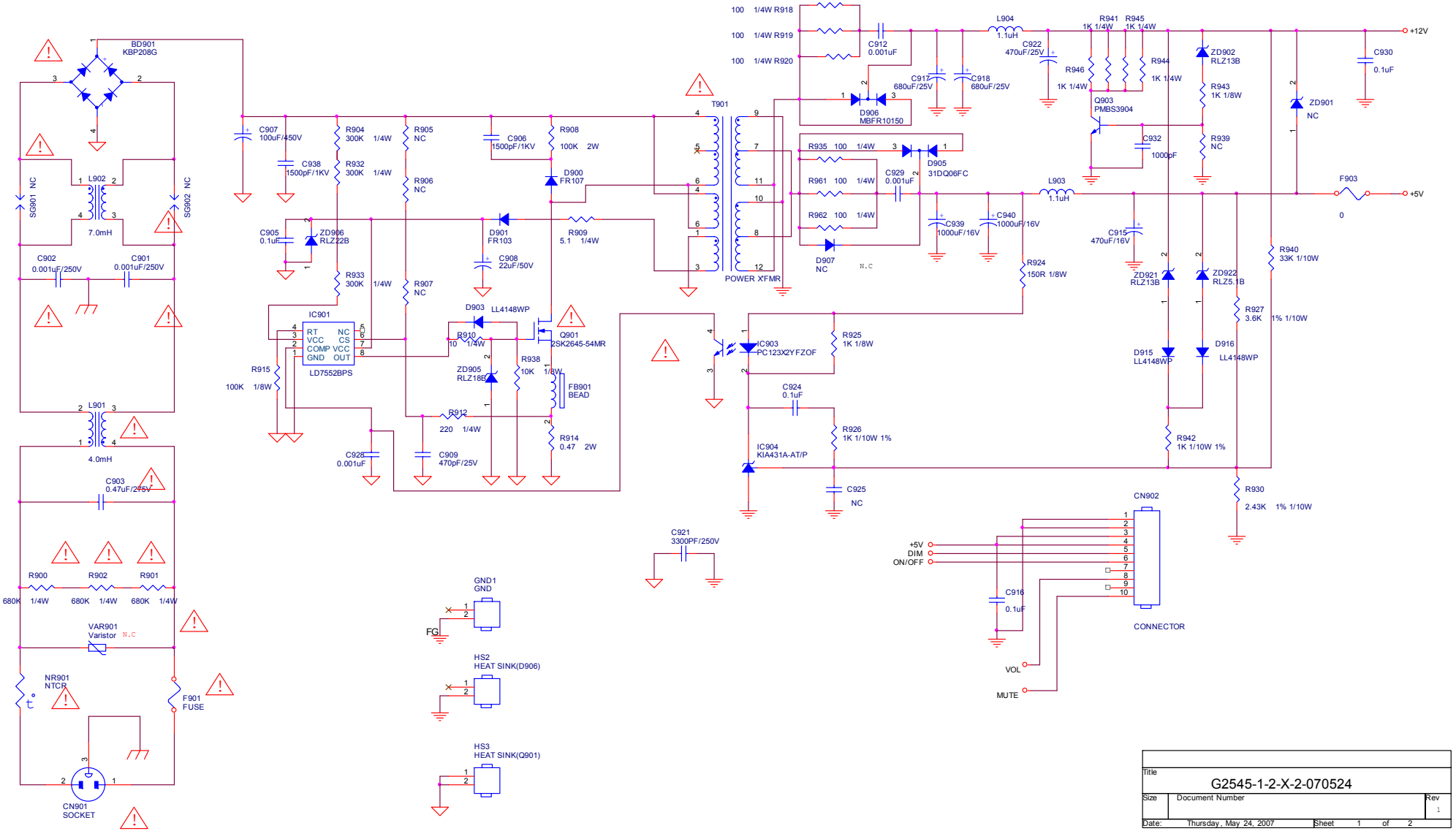

Title	G2545-1-2-X-2-070524	
Size	Document Number	Rev 1
Date: Thursday, May 24, 2007	Sheet 1 of 2	

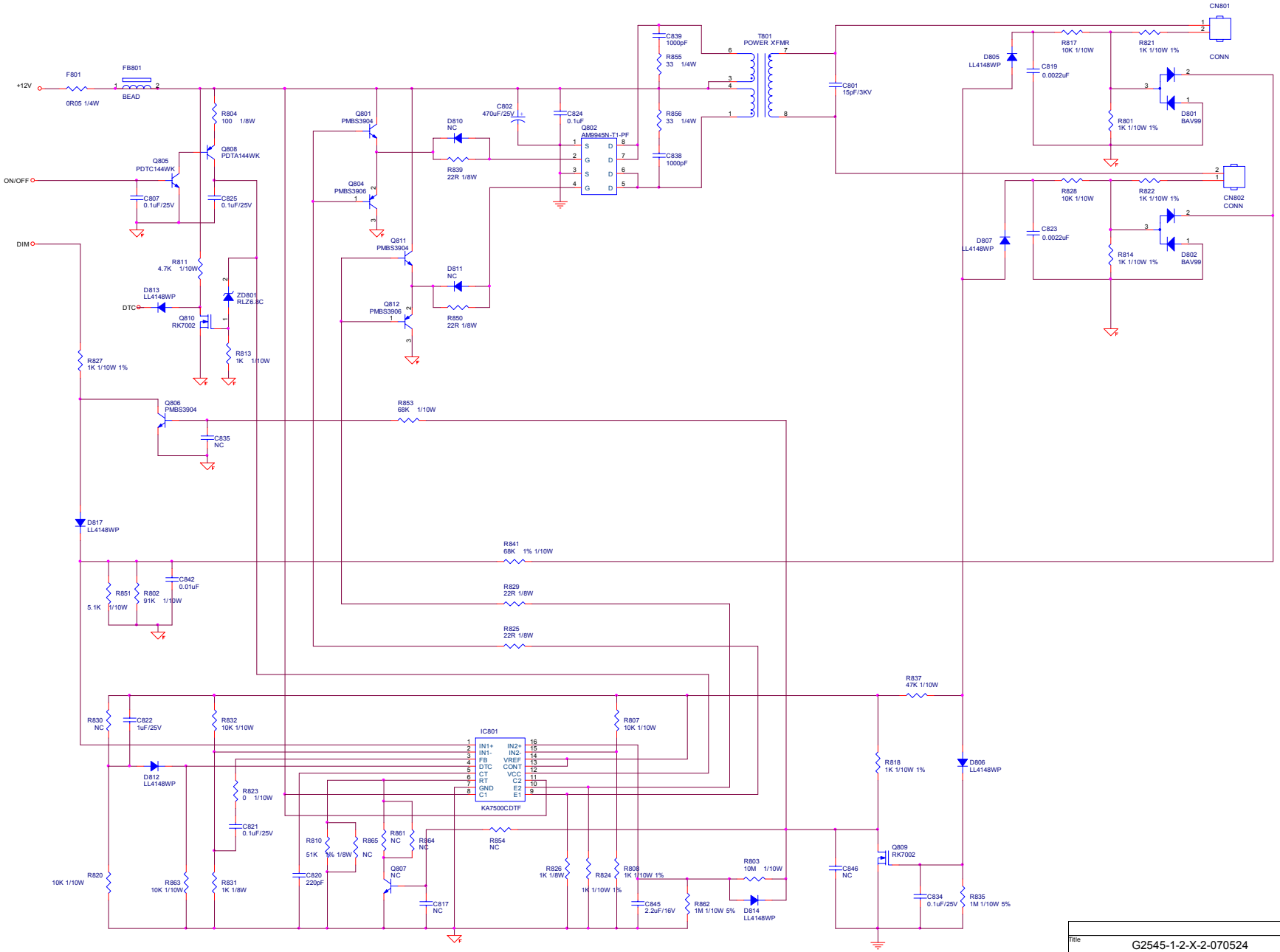

Title	G2545-1-2-X-2-070524	
Size	Document Number Custom 1.0	Rev 1
Date: Thursday, May 24, 2007	Sheet 2 of 2	

8. PCB Layout

8.1 Main Board

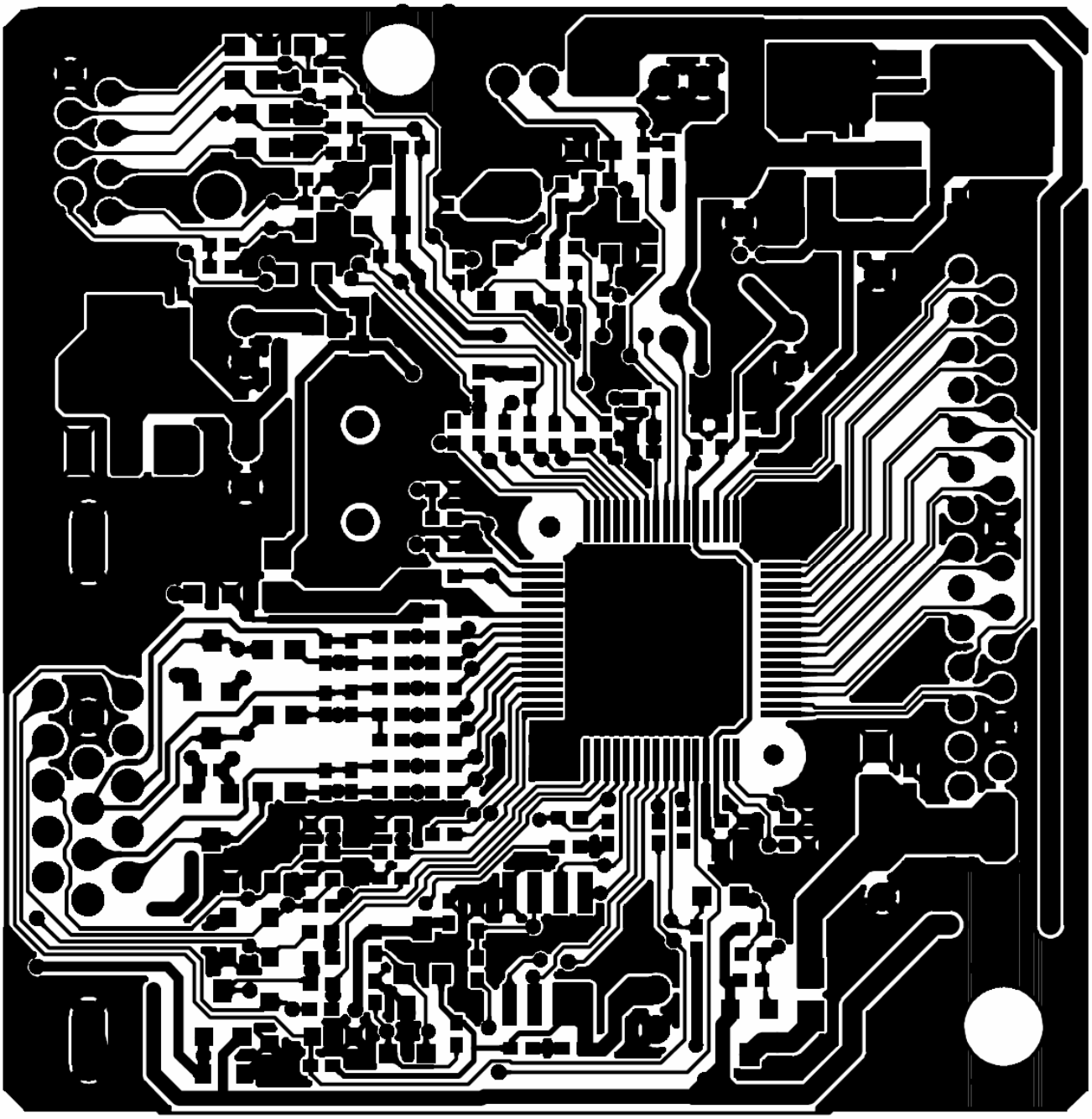

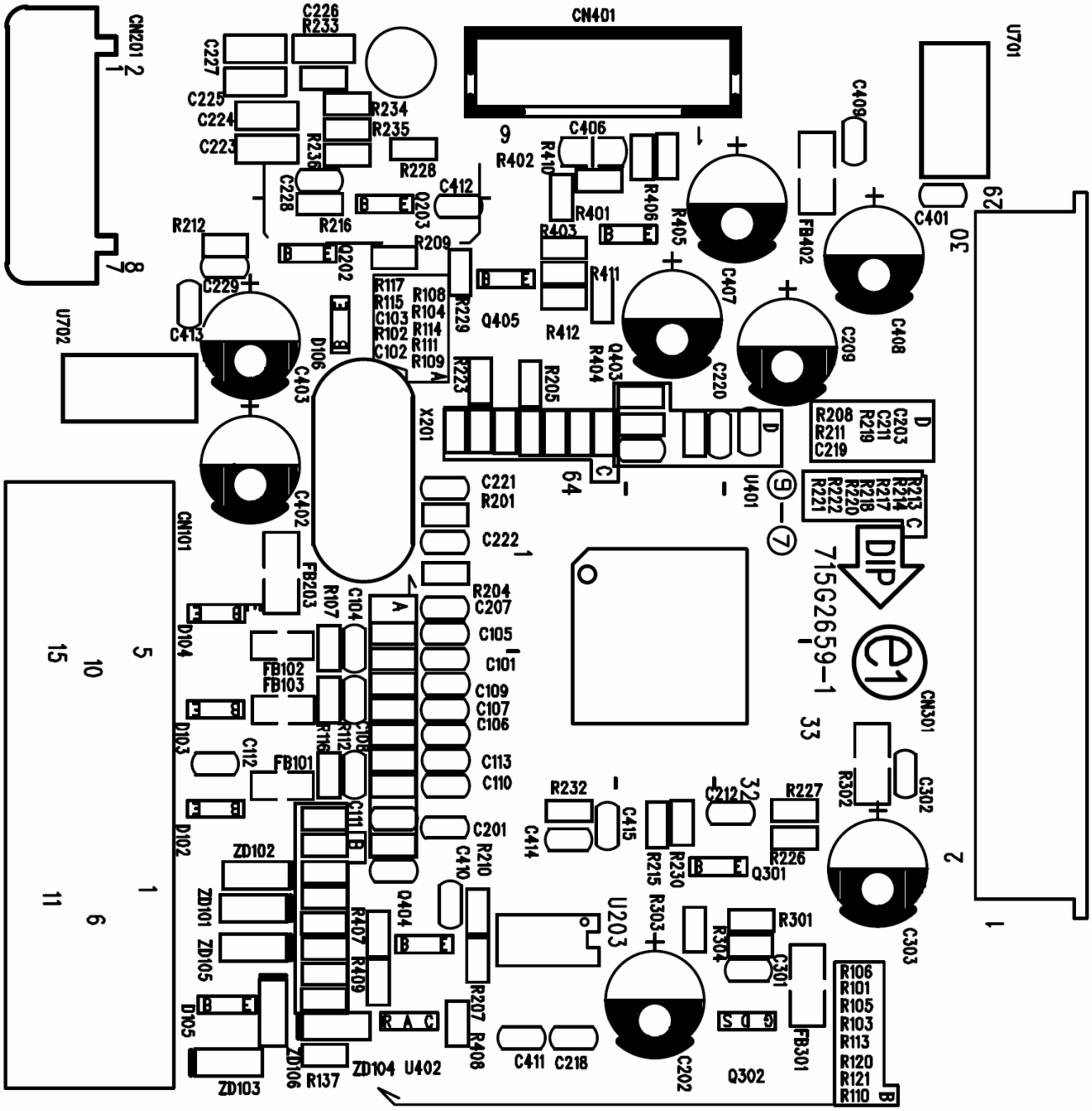
CN201
CN401
U701
U702
U203
U402
U401
X201
CN101
CN301
715G2659-1
DIP

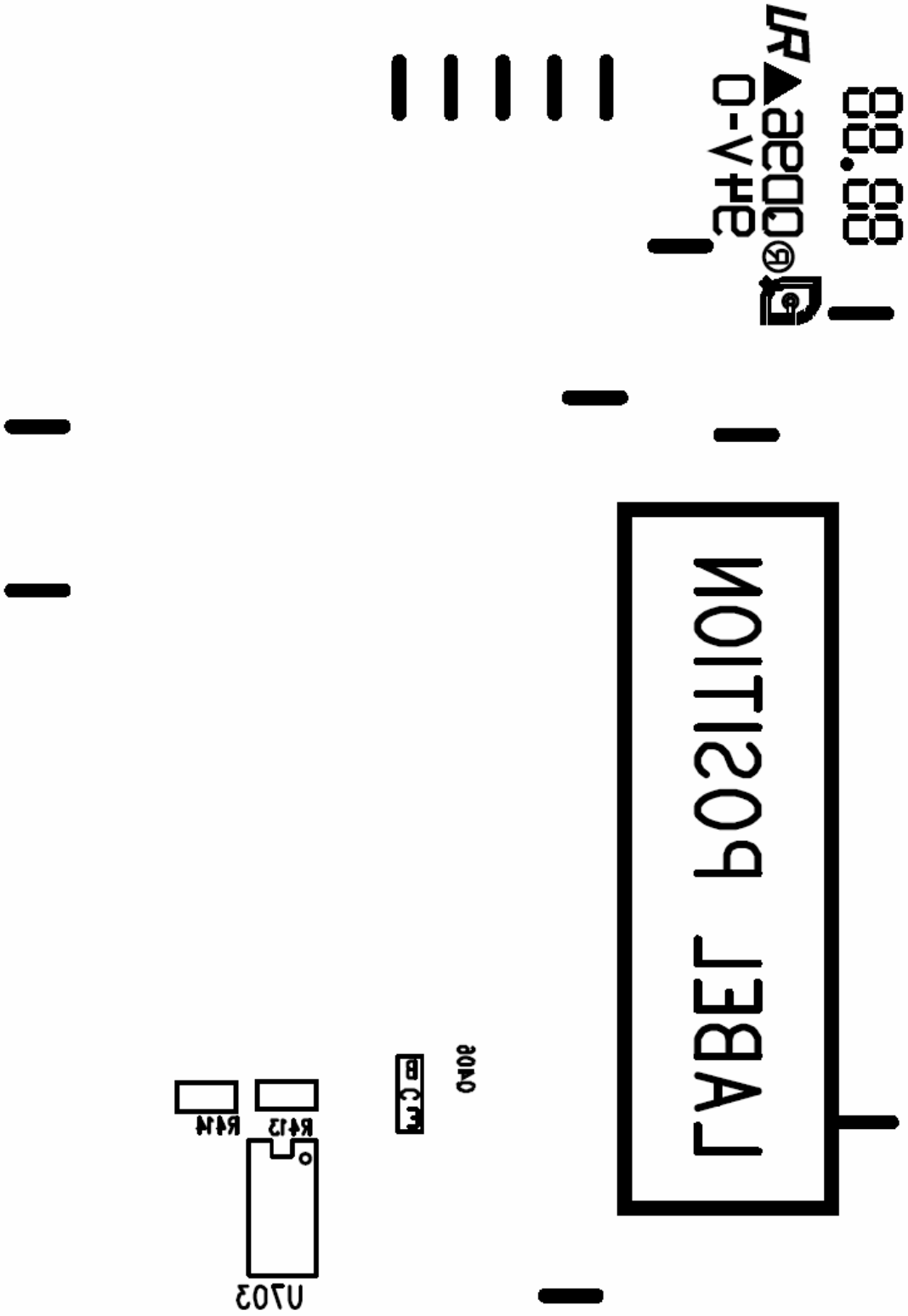
LABEL POSITION
U703
R413
R414

8.2 Power Board

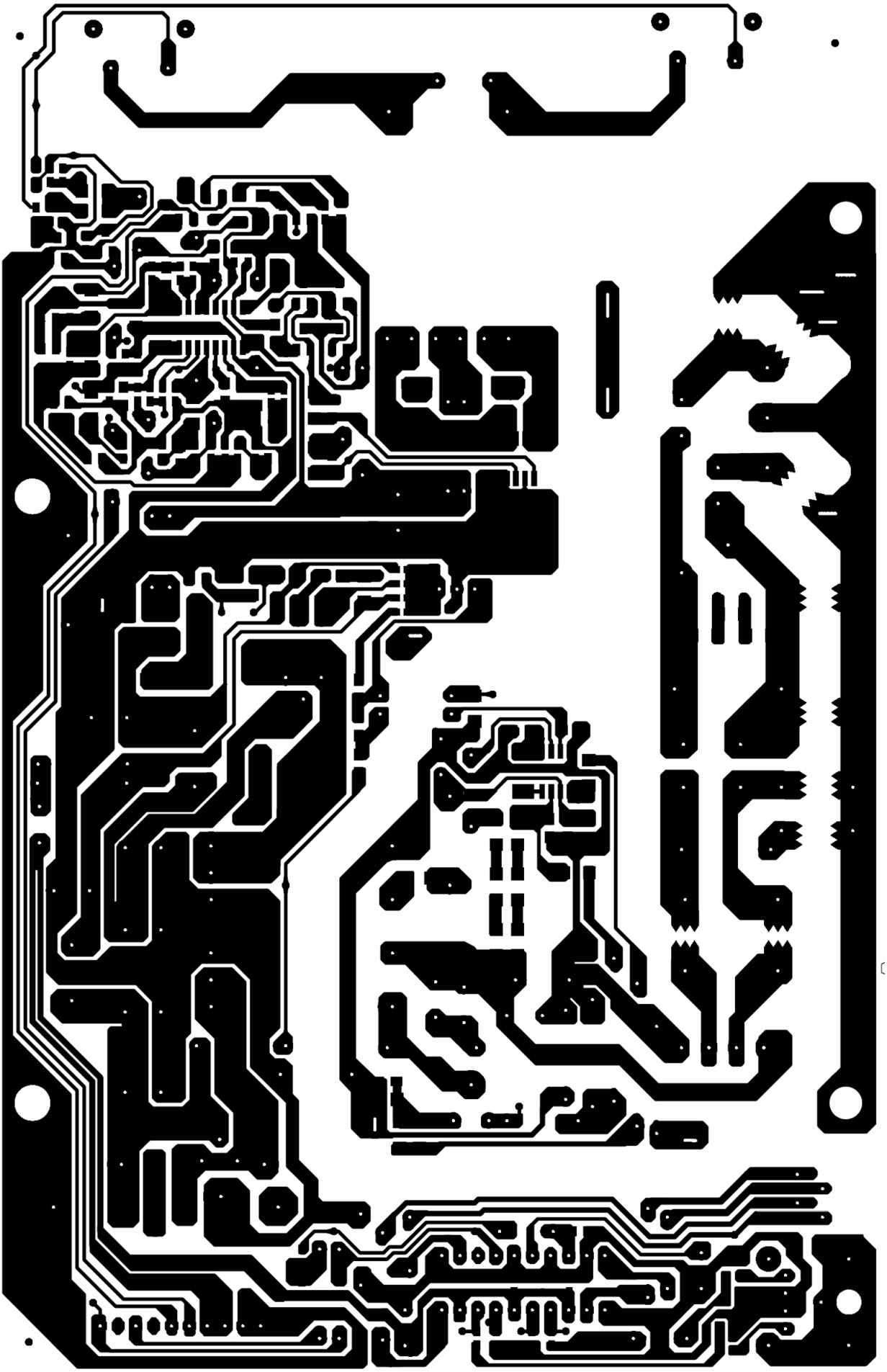

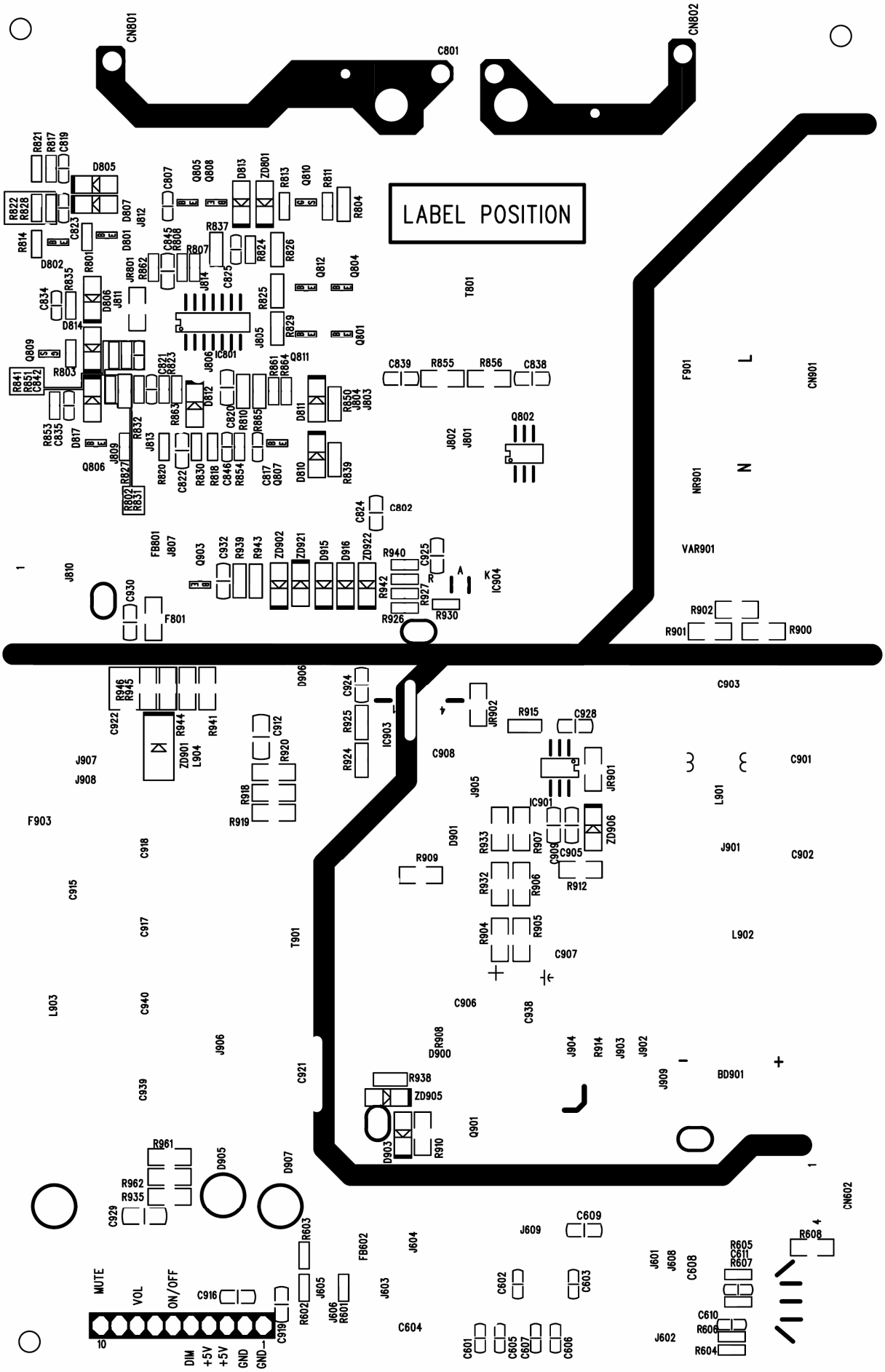
LABEL POSITION
CN801
CN802
C801
T801
F901
CN901
NR901
VAR901
F801
F903
T901
L903
L901
L902
BD901
CN602
MUTE
VOL
ON/OFF
DIM
+5V
+5V
GND
GND

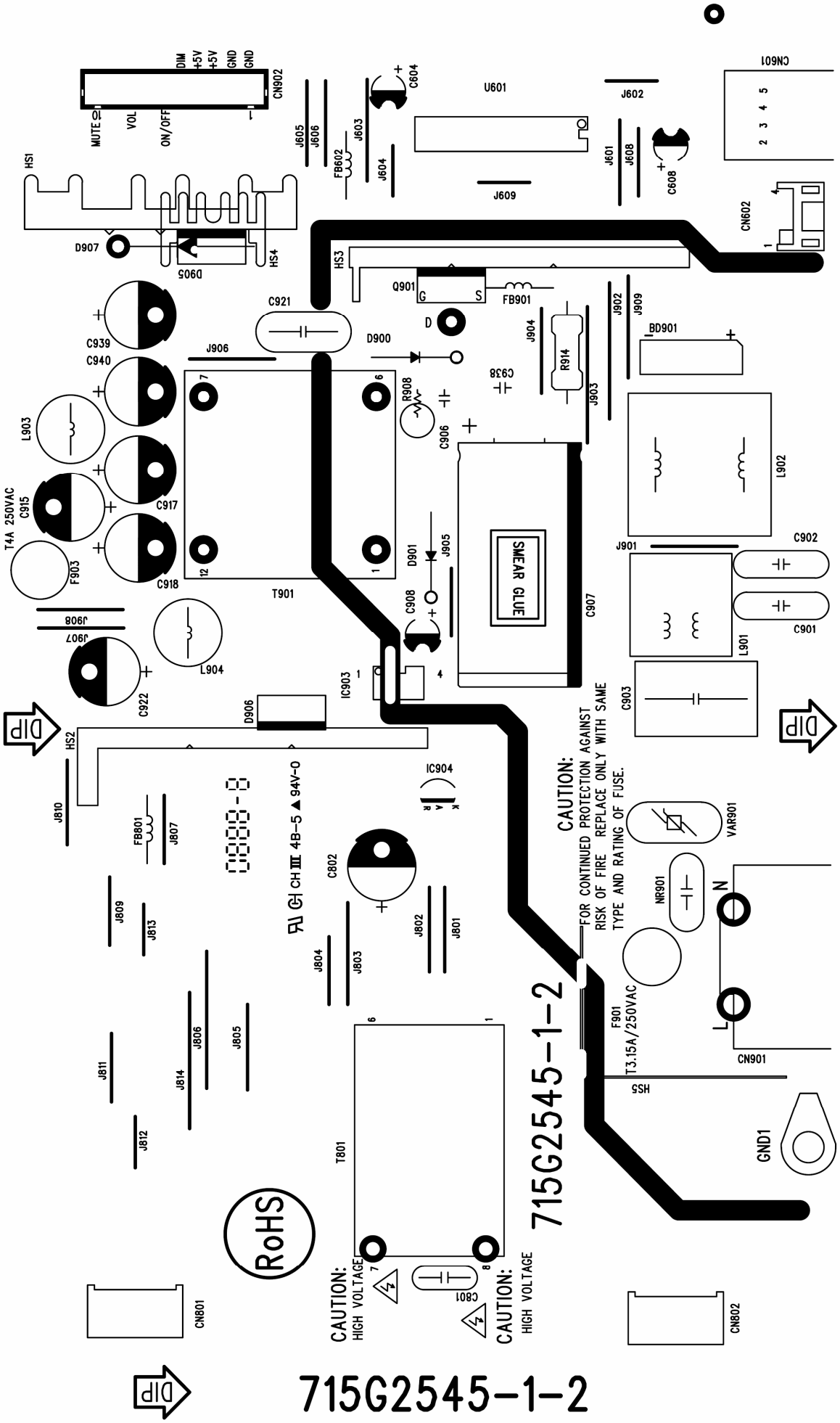
CN902
DIM
+5V
+5V
GND
GND
MUTE
VOL
ON/OFF
HS1
D907
D905
HS4
J605
J606
FB602
J603
J604
C604
U601
J602
J601
J608
C608
J609
CN601
CN602
HS3
Q901
G
S
FB901
C921
D900
J906
C939
C940
L903
C917
C915
T4A 250VAC
F903
C918
T901
R908
C906
C938
J904
R914
J903
J902
J909
BD901
L902
J901
C902
C901
L901
C903
D901
J905
C908
SMEAR GLUE
C907
J908
J907
L904
C922
IC903
D906
HS2
J810
FB801
J807
CH III 4B-5 ▲ 94V-0
IC904
C802
J809
J813
J802
J801
J804
J803
J806
J805
J811
J814
J812
T801
CAUTION:
FOR CONTINUED PROTECTION AGAINST
RISK OF FIRE REPLACE ONLY WITH SAME
TYPE AND RATING OF FUSE.
VAR901
NR901
N
L
F901
T3.15A/250VAC
CN901
HS5
GND1
715G2545-1-2
RoHS
CAUTION:
HIGH VOLTAGE
C801
CAUTION:
HIGH VOLTAGE
CN801
CN802
DIP
DIP
DIP

715G2545-1-2

8.3 Key Board

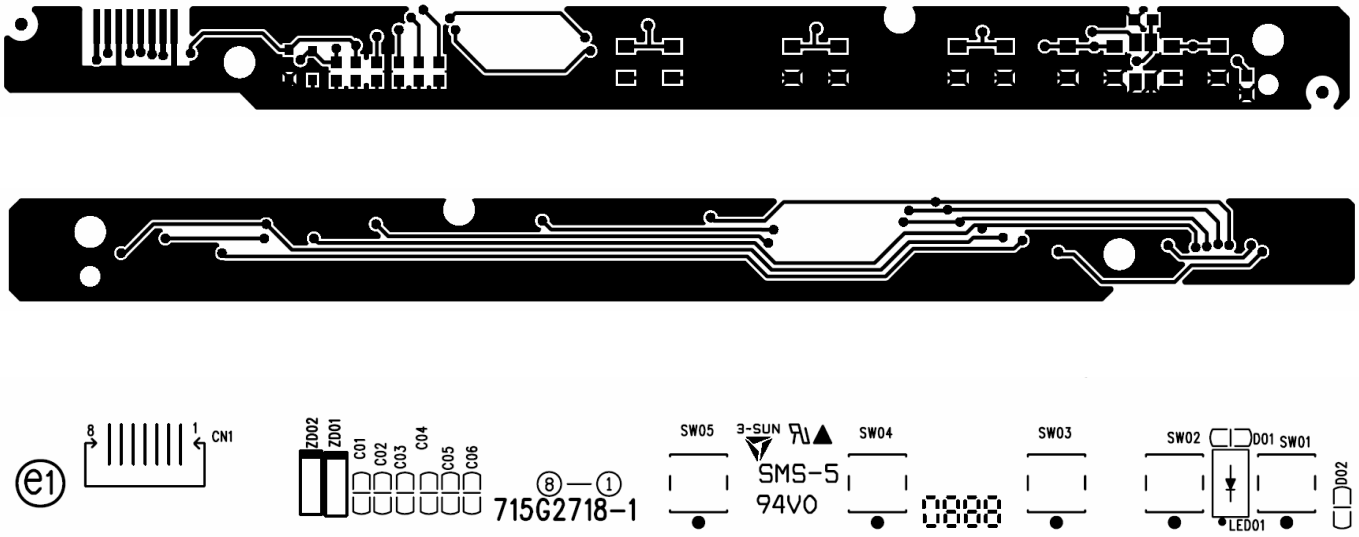
8
1
CN1
ZD02
ZD01
C01
C02
C03
C04
C05
C06
⑧—①
715G2718-1
SW05
3-SUN
SMS-5
94V0
SW04
SW03
SW02
D01
SW01
LED01
D02

9. Maintainability

9.1 Equipments and Tools Requirement

1. Voltage meter
2. Oscilloscope
3. Pattern Generator
4. LCD Color Analyzer
5. Service Manual
6. User Manual

9.2 Trouble shooting

9.2.1 Main Board

No power

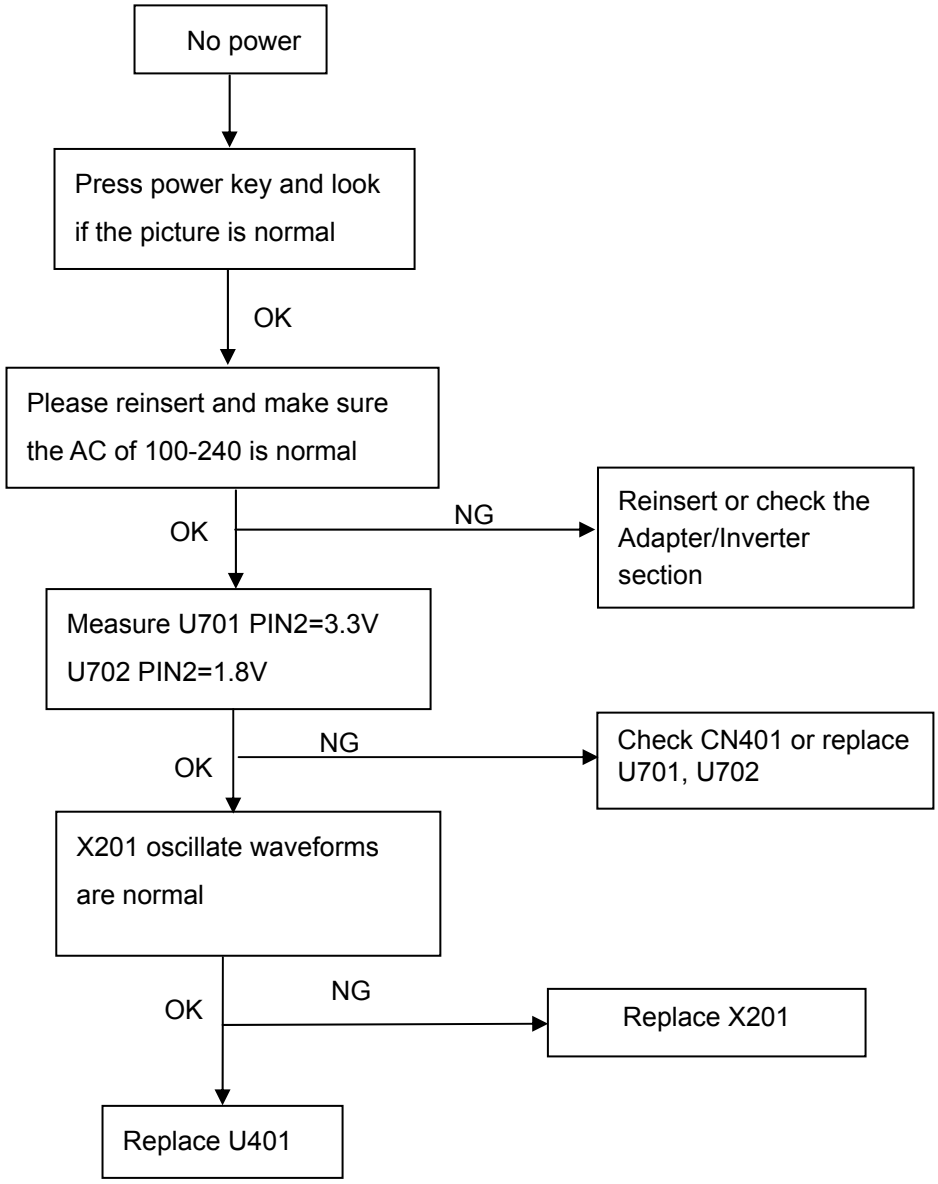

No picture (LED orange)

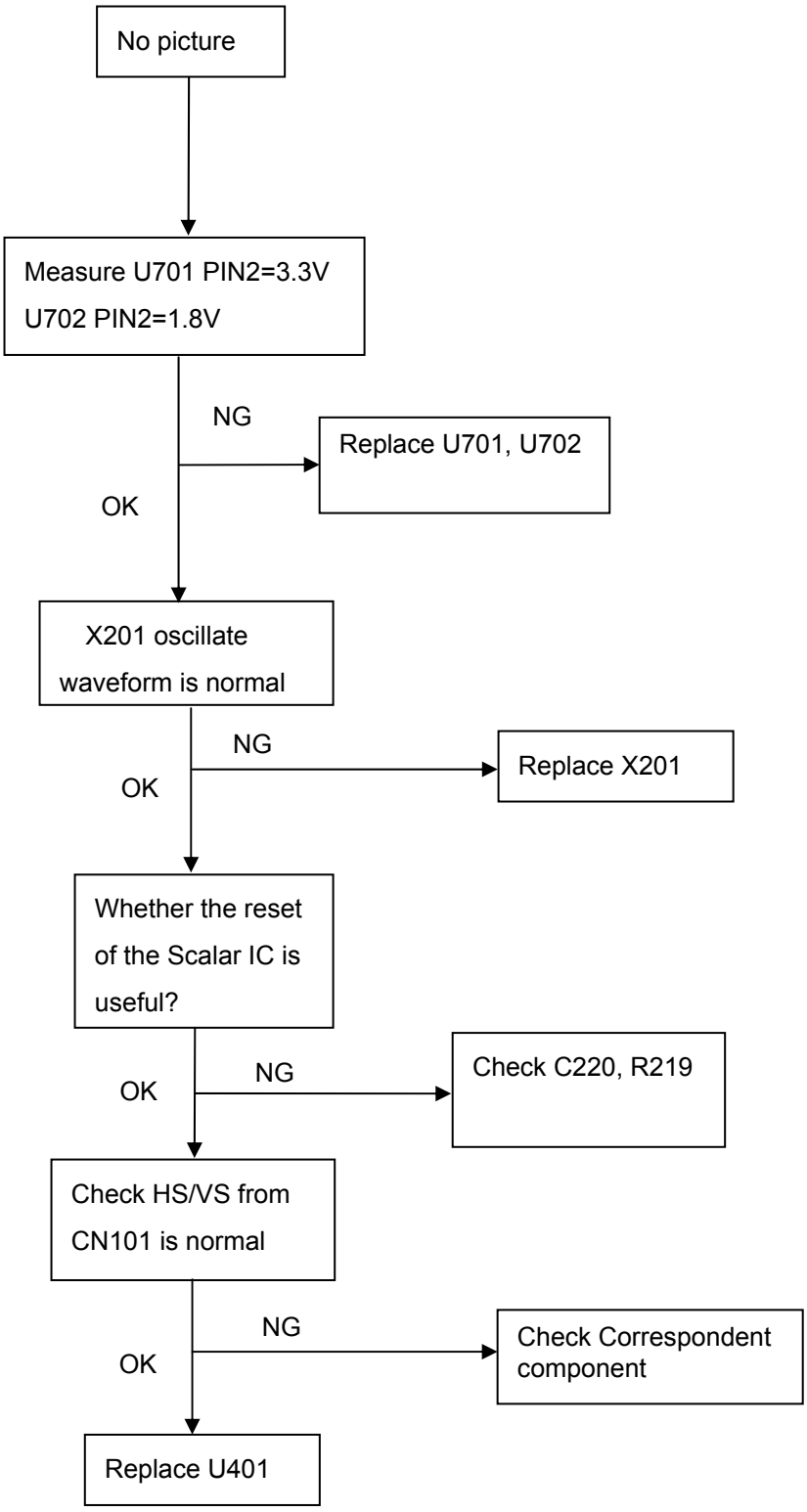

White screen

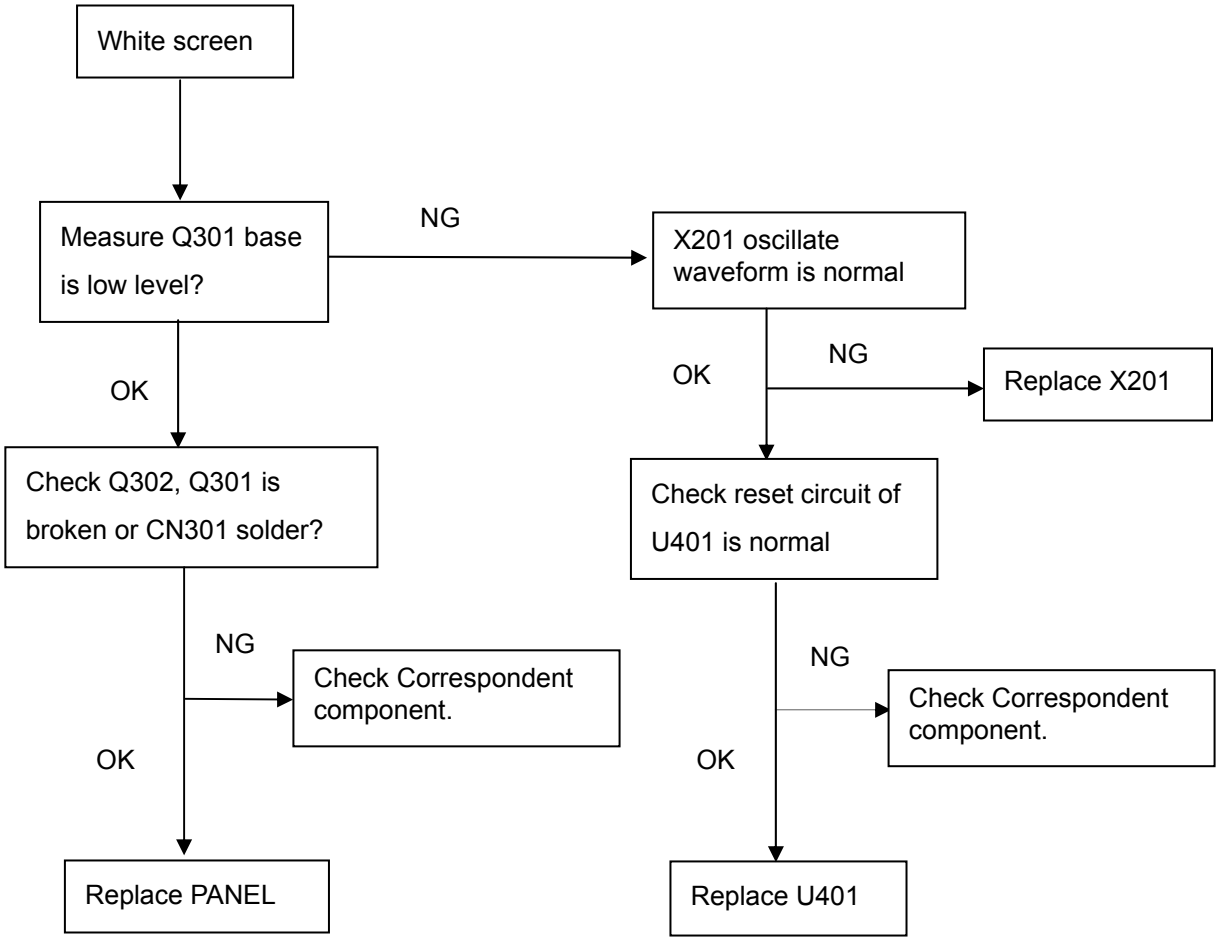

9.2.2 Power/Inverter Board

No power

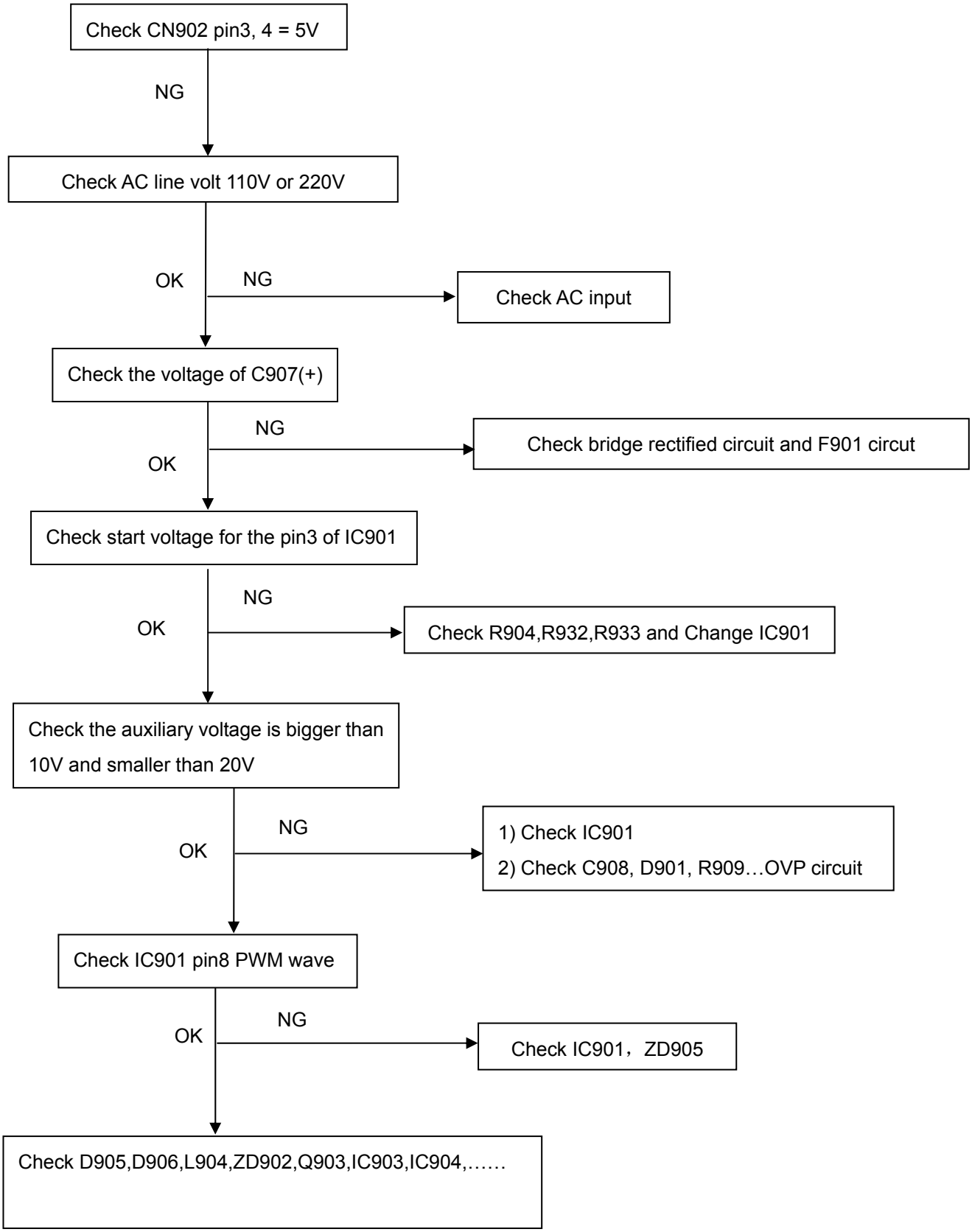

No Backlight

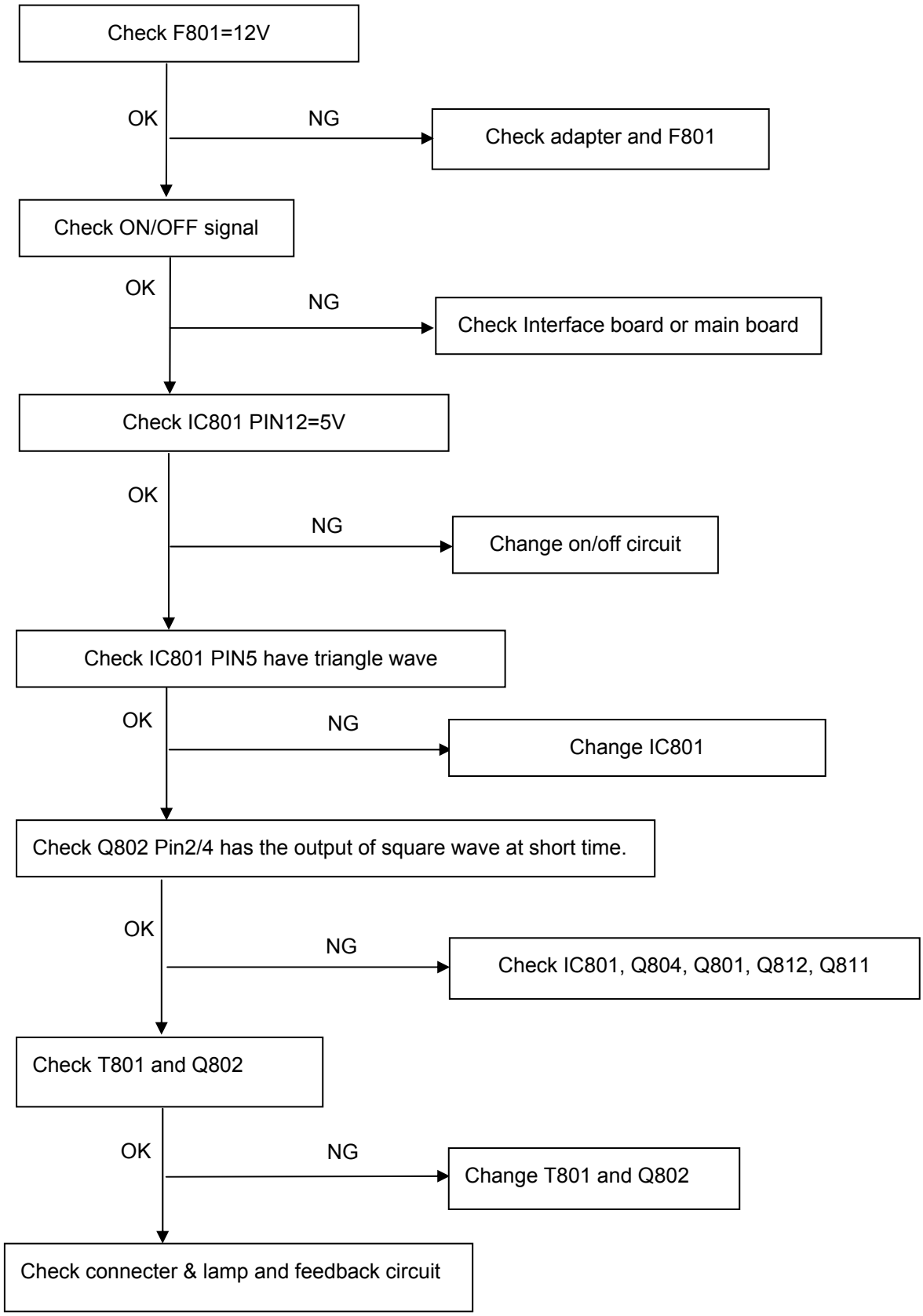

9.2.3 Keypad Board

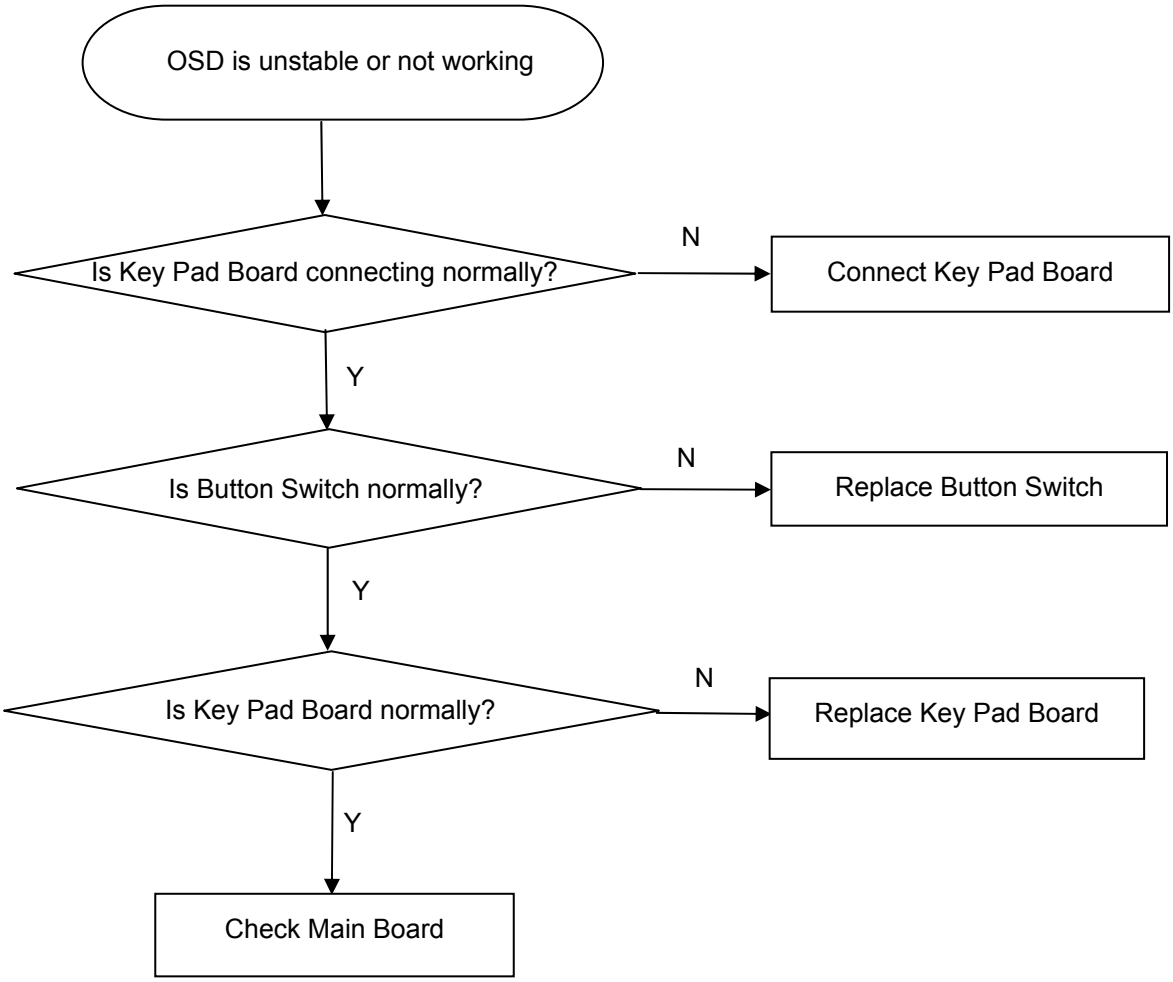

10. White balance, Luminance adjustment

Approximately 2 Hours should be allowed for warm up before proceeding White-Balance adjustment.

Before started adjust white balance, please setting the Chroma-7120 **MEM. Channel 3 to 6500^{0}K** colors, **MEM. Channel 3 to 9300^{0}K** colors, **MEM. Channel 3 to 5700^{0}K** (our 9300 parameter is x=283±30, y=297±30,Ymin = 140 cd/m^2; 6500 parameter is x =313±30, y=329±30, Ymin = 180 cd/m^2, and 5700 parameter is x = 328 ±30, y = 140 cd/m^2.)

How to setting MEM.channel you can reference to Chroma-7120 user guide or simple use " **SC"** key and " **NEXT"** key to modify x, y, Y value and use **"ID"** key to modify the TEXT description Following is the procedure to do white-balance adjust

Enter into the factory mode:

Press MENU and "+" button during press Power button will activate the factory mode,

Gain adjustment:

Move cursor to "-Factory Setting-" and press MENU key to enter this sub-menu.

Move cursor to "Factory" and press MENU key.

Move cursor to " Auto Level" and press MENU key to adjust Gain and Offset automatically;

a. Adjust sRGB (6500^{0}K) color-temperature

1. Switch the Chroma-7120 to **RGB-mode** (with press "MODE" button)
2. Switch the MEM. channel to Channel 3 (with up or down arrow on Chroma-7120)
3. The LCD-indicator on Chroma-7120 will show x = 313 ±30, y = 329 ±30, Ymin = 180 cd/m^2

b. Adjust **Color1** (9300^{0}K) color-temperature

4. Switch the Chroma-7120 to **RGB-mode** (with press "MODE" button)
5. Switch the MEM. channel to Channel 3 (with up or down arrow on Chroma-7120)
6. The LCD-indicator on Chroma-7120 will show x = 283 ±30, y = 297 ±30, Ymin = 140 cd/m^2

c. Adjust **Color2** (5700^{0}K) color-temperature

7. Switch the Chroma-7120 to **RGB-mode** (with press "MODE" button)
8. Switch the MEM. channel to Channel 3 (with up or down arrow on Chroma-7120)
9. The LCD-indicator on Chroma-7120 will show x = 328 ±30, y = 344 ±30, Ymin = 140 cd/m^2
10. Move cursor to "Exit/Save" sub-menu and press MENU key to save adjust value and exit.

Turn the POWER-button off to on to quit from factory mode.

Max Brightness measurement: >200 cd/㎡

Test conditions:

a. Switch to the full white pattern, in user mode main menu:
   1. Set <Color Settings> Red, Green, and Blue to the max.
   2. Set <Brightness> Brightness, Contrast to the max.

b. The Minimum brightness is: **<** 40% of Max luminance (max luminance = max contrast + max brightness)

Test conditions:

Set <Brightness> Brightness, Contrast to the min.

11. ISP Instruction

Configure and procedure

It is a windows-based program, which cannot be run in MS-DOS.

System and equipment requirements

(1). An i486 (or above) personal computer or computer or compatible.

(2). Microsoft operation system Window 95/98/2000/XP.

(3). ISP Tool: ISP board/printer cable/VGA cable as shown in Fig.1

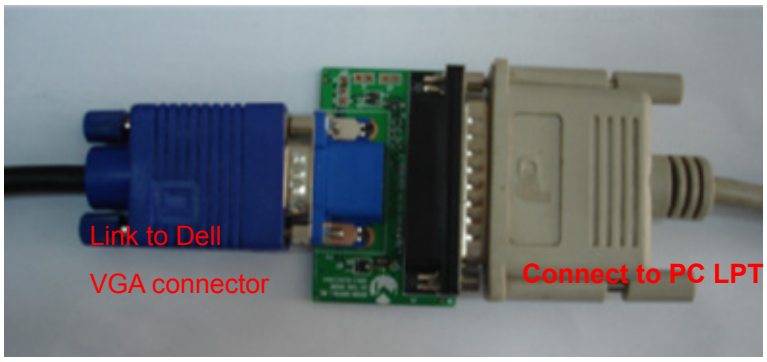

Fig.1

(4). ISP software checklist

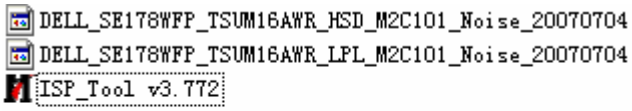

(5). Update the firmware

Step 1: Double click the ISP_Tool v3.772.exe icon and click Connect, bring up Fig.2

Fig.2

Step 2: Click OK and click Read, select program Bin file, bring up Fig.3

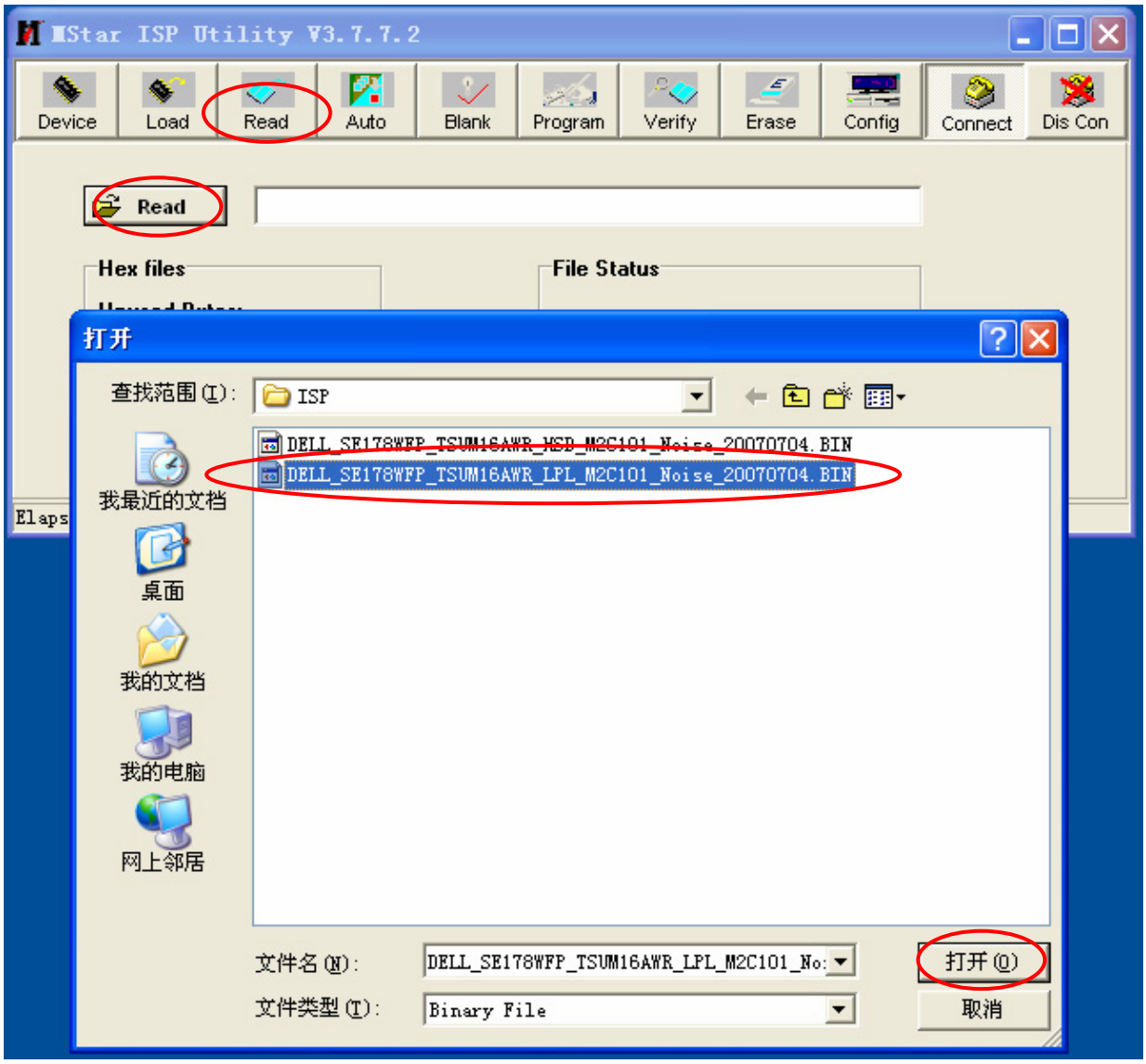

Fig.3

Step3: Click open and OK, bring up Fig.4 and Fig.5

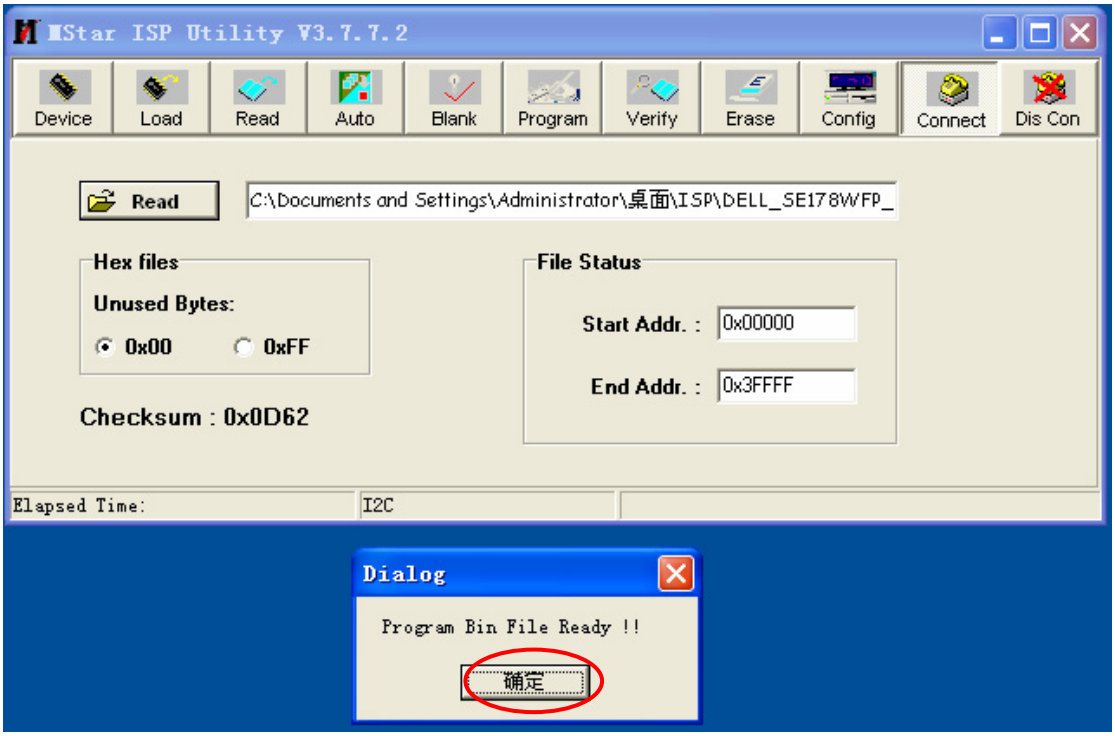

Fig.4

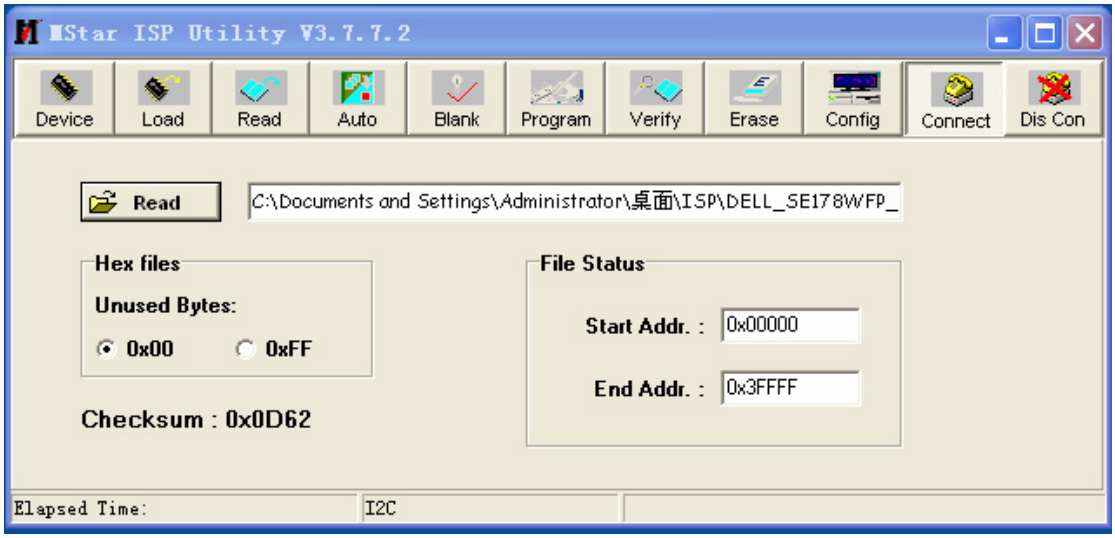

Fig.5

Step 4: Click Auto and Run, bring up Fig.6

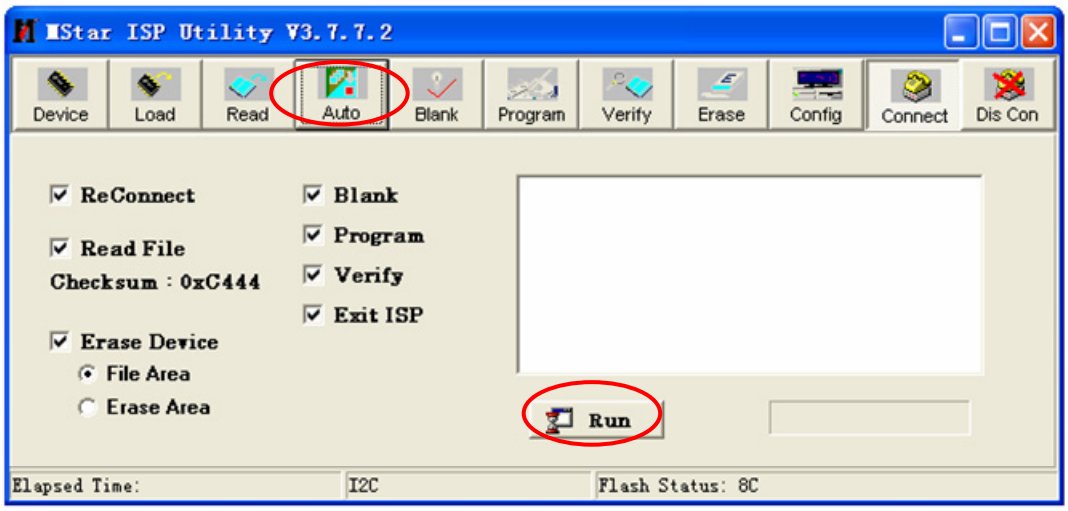

Fig.6

Step 5: When appear Verify OK, writer finished as shown Fig.7

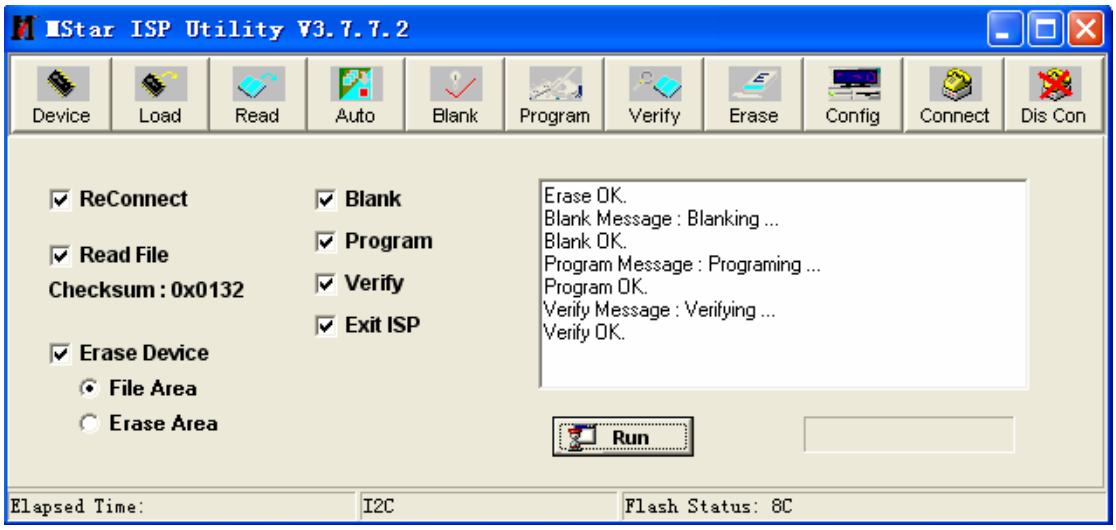

Fig.7

12. Exploded View

Dell SE178WFPc Explosion Flowchart

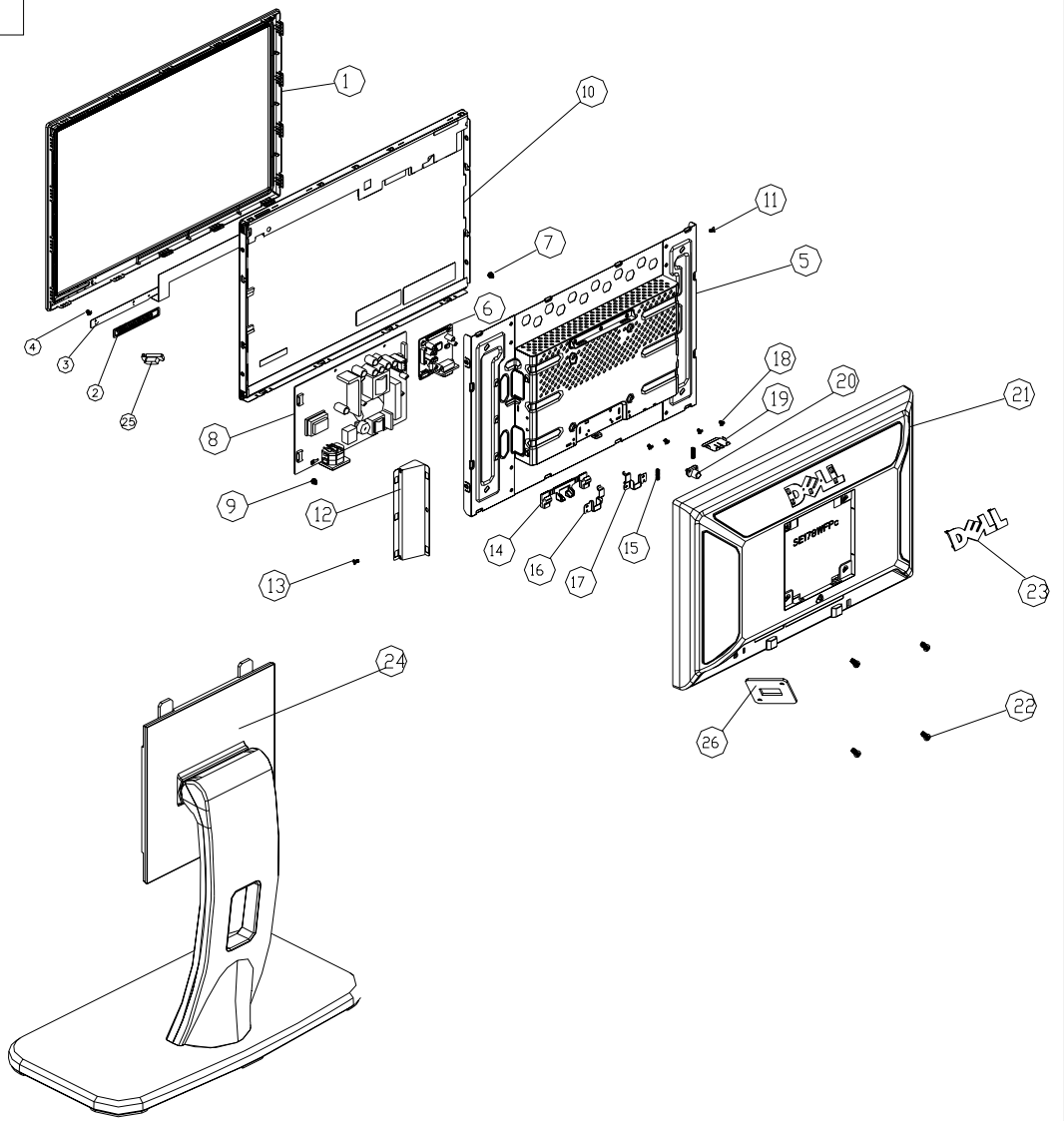

Item.	Parts Name	Parts Number	Qty
	dell logo	Q23G3178-700-8A	1
	EPS	Q44G7066-1/2/3/4	1
26.	kensington bracket	15G8146-1	1
25.	lens_power	Q33G0138-*	1
24.	Hinge	Q37G0054-1	1
23.	COVER_LOGO_B	Q33G0137-*	1
22.	Screw M4.0X10mm(Back Cover to Mainframe)	0M1G2940-10-225-CR3	4
21.	Rear Cover	Q34G0185-*	1
20.	Button Release	A33G0025-*	1
19.	Shield Wire	85G702-1	1
18.	Screw M3.0x6mm(Bracket R/L to Mainframe)	0M1G130-6-120	4
17.	Holder Bracket R	015G8185-1	1
16.	Holder Bracket L	015G8186-1	1
15.	Spring Holder	019G588-3	2
14.	Stand Holder	A20G0007-1	1
13.	Screw M3.0X6mm(Shield to mainfrme)	0M1G330-4-120	1
12.	Inverter Shield	Q85G0051-1	1
11.	Screw M3.0X6mm(PANEL&MAINFRAME)	0M1G130-6-125	4
10.	Panel(HSD &LPL)	NA	1
9.	Screw M3.0X6mm(Power Board to Mainframe)	0M1G1730-6-125	3
8.	Power board 193X124mm	NA	1
7.	Screw M3.0X6mm(Scalar Board to Mainframe)	0M1G1730-6-125	1
6.	Scalar Board 57X56mm	NA	1
5.	Mainfame(For HSD Panel)	Q15G0212-1	1
4.	Screw T2.0X2.2mm(Function Board to Bezel)	Q01G6019-2	3
3.	Function PCB Board(SE178FPc)	NA	1
2.	Button Function	Q33G0136-*	1
1.	Bezel	Q34G0184-*	1

13. Recommended Parts & BOM List

R ecommended Parts List (T77GMRHFYWDRNN)

Location	Part No.	Description
PANEL	750GLG71W3B11Z000D	PANEL LM171WX3-TLB1 KR ZBD LPL
Mainboard	CBPC7GMRDRQ1	MAIN BOARD
POWER BOARD	PWPC721GD1	POWER BOARD
KEY BOARD	KEPC7QD1	KEY BOARD
LAYOUT	715G2659 1	MAIN BOARD PCB
LAYOUT	715G2718 1	KEY BOARD
LAYOUT	715G2545 1 2	POWER BOARD
U203	WDLMRT7GKQ2	SST25LF020A-33-4C-SAE
BACK COVER	Q34G0185 VH 1B 30	REAR COVER(17)
BEZEL	Q34G0184 SNA1B 30	BEZEL L17W-7DELL2
CARTON	Q44G7066700 1A	CARTON
EPS	Q44G7066 1	EPS
EPS	Q44G7066 2	EPS
EPS	Q44G7066 3	EPS
EPS	Q44G7066 4	EPS
HINGE	Q37G0054 1	HINGE
ID LABEL	Q40G 17N70016A	RATING LABEL
KEY PAD	A33G0025 VH 1L	Release button
KEY PAD	Q33G0136 SN 1L	BUTTON FUNC
LVDS	S89G179T30N501	LVDS ASS'Y
MANUAL	Q41G7800700B05	SE178WFP QSG
PROTECT FILM	Q52G6020 46	PROTECT FILM
SIGNAL	89G 728LAA 2D	SIGNAL CABLE
U401	056G 562548	IC TSUM16AWR-LF-1 MSTAR
IC801	056G 379 22	IC TL494IDR SOIC-16
IC901	056G 379 76	IC LD7552BPS SOP-8

BOM List (T77GMRHFYWDRNN)

Location	Part Number	Description
	026G 800700 6A	S/N LABEL
	040G 581700 3A6813	CARTON LABEL
	044G9000 7A	PAPER BOARD
	044G9003100	CORNER PAPER
	044G9003119	CORNER PAPER
	052G 1186	SMALL TAPE
	052G6022 1500	SMALL TAPE
	085G 702 1	SHIELD WIRE
E089B	089G 728LAA 2D	SIGNAL CABLE
	0M1G 130 6125	SCREW
	0M1G 330 4120	SCREW 42A9930008
	0M1G1730 6125	SCREW
	0M1G1730 6125	SCREW
	0M1G1730 6125	SCREW
	0M1G2940 10225 CR3	SCREW
	705GQ715013	SE178WFPC DELL MAIN FRAME ASS'Y
	015G8185 1	HOLDER BRACKET R
	015G8186 1	HOLDER BRACKET L
	019G 588 3	SPRING -HOLDER
	0M1G 130 6120	SCREW M3X6
	A20G0007 1	STAND HOLDER
	Q15G0212 2	MAINFRAME
	750GLG71W3B11Z000D	PANEL LM171WX3-TLB1 KR ZBD LPL
	A33G0025 VH 1L	RELEASE BUTTON
	CBPC7GMRDRQ1	MAIN BOARD
CN401	033G3802 6B Y	CONN 6PIN 2.0
CN201	033G8019 8T JH	WIRE HARNESS
CN301	033G801930F CH JS	CONNECTOR
	040G 457624 1B	LABEL-CPU
	040G 45762412B	CBPC LABEL
R402	061G152M339 64	CHIPR 3.3 OHM +-5% 2W
C303	067G305V101 3	105℃ 100UF M 16V
C403	067G305V101 3	105℃ 100UF M 16V
C402	067G305V101 3P	100UF +-20% 16V 105℃
C407	067G305V101 3P	100UF +-20% 16V 105℃
C408	067G305V101 3P	100UF +-20% 16V 105℃
C202	067G305V479 3P	4.7UF 16V 105℃
C209	067G305V479 3P	4.7UF 16V 105℃
C220	067G305V479 3P	4.7UF 16V 105℃

CN101	088G 35315F H	D-SUB 15PIN
X201	093G 22 53	CRYSTAL 14.318MHZHC-49US
U401	056G 562548	IC TSUM16AWR-LF-1 MSTAR
U702	056G 563 27	IC AIC1117A-18PYTR-R SOT223
U701	056G 585 4A	AP1117E33LA
U703	056G1133 34	M24C02-WMN6TP
U203	056G1133 81	SST25LF020A-33-4C-SAE
Q403	057G 417 4	PMBS3904/PHILIPS-SMT(04)
Q202	057G 417 6	PMBS3906/PHILIPS-SMT(06)
Q203	057G 417 6	PMBS3906/PHILIPS-SMT(06)
Q301	057G 417 6	PMBS3906/PHILIPS-SMT(06)
Q406	057G 417 12 T	KEC 2N3904S-RTK/PS
Q302	057G 763 1	A03401 SOT23 BY AOS(A1)
R101	061G0402000	RST CHIPR 0 OHM +-5% 1/16W
R201	061G0402000	RST CHIPR 0 OHM +-5% 1/16W
R207	061G0402101	RST CHIPR 100 OHM +-5% 1/16W
R117	061G0402101	RST CHIPR 100 OHM +-5% 1/16W
R115	061G0402101	RST CHIPR 100 OHM +-5% 1/16W
R114	061G0402101	RST CHIPR 100 OHM +-5% 1/16W
R113	061G0402101	RST CHIPR 100 OHM +-5% 1/16W
R111	061G0402101	RST CHIPR 100 OHM +-5% 1/16W
R110	061G0402101	RST CHIPR 100 OHM +-5% 1/16W
R108	061G0402101	RST CHIPR 100 OHM +-5% 1/16W
R104	061G0402101	RST CHIPR 100 OHM +-5% 1/16W
R103	061G0402101	RST CHIPR 100 OHM +-5% 1/16W
R102	061G0402101	RST CHIPR 100 OHM +-5% 1/16W
R213	061G0402101	RST CHIPR 100 OHM +-5% 1/16W
R214	061G0402101	RST CHIPR 100 OHM +-5% 1/16W
R215	061G0402101	RST CHIPR 100 OHM +-5% 1/16W
R222	061G0402101	RST CHIPR 100 OHM +-5% 1/16W
R230	061G0402101	RST CHIPR 100 OHM +-5% 1/16W
R406	061G0402102	RST CHIPR 1 KOHM +-5% 1/16W
R235	061G0402102	RST CHIPR 1 KOHM +-5% 1/16W
R233	061G0402102	RST CHIPR 1 KOHM +-5% 1/16W
R414	061G0402103	RST CHIPR 10 KOHM +-5% 1/16W
R413	061G0402103	RST CHIPR 10 KOHM +-5% 1/16W
R403	061G0402103	RST CHIPR 10 KOHM +-5% 1/16W
R401	061G0402103	RST CHIPR 10 KOHM +-5% 1/16W
R301	061G0402103	RST CHIPR 10 KOHM +-5% 1/16W
R232	061G0402103	RST CHIPR 10 KOHM +-5% 1/16W

R227	061G0402103	RST CHIPR 10 KOHM +-5% 1/16W
R226	061G0402103	RST CHIPR 10 KOHM +-5% 1/16W
R223	061G0402103	RST CHIPR 10 KOHM +-5% 1/16W
R211	061G0402103	RST CHIPR 10 KOHM +-5% 1/16W
R210	061G0402103	RST CHIPR 10 KOHM +-5% 1/16W
R209	061G0402103	RST CHIPR 10 KOHM +-5% 1/16W
R205	061G0402103	RST CHIPR 10 KOHM +-5% 1/16W
R137	061G0402103	RST CHIPR 10 KOHM +-5% 1/16W
R219	061G0402104	RST CHIPR 100 KOHM +-5% 1/16W
R304	061G0402104	RST CHIPR 100 KOHM +-5% 1/16W
R405	061G0402123	RST CHIPR 12KOHM +-5% 1/16W
R234	061G0402202	RST CHIP 2K 1/16W 5%
R106	061G0402222	RST CHIPR 2.2 KOHM +-5% 1/16W
R105	061G0402222	RST CHIPR 2.2 KOHM +-5% 1/16W
R204	061G0402390 0F	RST CHIP 390R 1/16W 1%
R109	061G0402390 0F	RST CHIP 390R 1/16W 1%
R229	061G0402392	RST CHIP 3.9K 1/16W 5%
R228	061G0402392	RST CHIP 3.9K 1/16W 5%
R404	061G0402472	RST CHIPR 4.7 KOHM +-5% 1/16W
R303	061G0402472	RST CHIPR 4.7 KOHM +-5% 1/16W
R218	061G0402472	RST CHIPR 4.7 KOHM +-5% 1/16W
R217	061G0402472	RST CHIPR 4.7 KOHM +-5% 1/16W
R121	061G0402472	RST CHIPR 4.7 KOHM +-5% 1/16W
R120	061G0402472	RST CHIPR 4.7 KOHM +-5% 1/16W
R212	061G0402621	RST CHIP 620R 1/16W 5%
R208	061G0402682	RST CHIP 6K8 1/16W 5%
R107	061G0402750	RST CHIPR 75 OHM +-5% 1/16W
R112	061G0402750	RST CHIPR 75 OHM +-5% 1/16W
R116	061G0402750	RST CHIPR 75 OHM +-5% 1/16W
R216	061G0402750	RST CHIPR 75 OHM +-5% 1/16W
R302	061G0805331	RST CHIPR 330 OHM +-5% 1/8W
C415	065G0402104 12	CHIP 0.1UF 50V X7R
C413	065G0402104 12	CHIP 0.1UF 50V X7R
C412	065G0402104 12	CHIP 0.1UF 50V X7R
C409	065G0402104 12	CHIP 0.1UF 50V X7R
C401	065G0402104 12	CHIP 0.1UF 50V X7R
C302	065G0402104 12	CHIP 0.1UF 50V X7R
C301	065G0402104 12	CHIP 0.1UF 50V X7R
C229	065G0402104 12	CHIP 0.1UF 50V X7R
C228	065G0402104 12	CHIP 0.1UF 50V X7R

C219	065G0402104 12	CHIP 0.1UF 50V X7R
C218	065G0402104 12	CHIP 0.1UF 50V X7R
C212	065G0402104 12	CHIP 0.1UF 50V X7R
C211	065G0402104 12	CHIP 0.1UF 50V X7R
C207	065G0402104 12	CHIP 0.1UF 50V X7R
C203	065G0402104 12	CHIP 0.1UF 50V X7R
C201	065G0402104 12	CHIP 0.1UF 50V X7R
C112	065G0402104 12	CHIP 0.1UF 50V X7R
C103	065G0402220 31	CHIP 22PF 50V NPO
C102	065G0402220 31	CHIP 22PF 50V NPO
C414	065G0402224 17	CAP CER 0.22UF -20%-80%
C222	065G0402330 31	33PF +-50% 50V NPO
C221	065G0402330 31	33PF +-50% 50V NPO
C113	065G0402473 12	CHIP 0.047UF 16V X7R
C110	065G0402473 12	CHIP 0.047UF 16V X7R
C109	065G0402473 12	CHIP 0.047UF 16V X7R
C107	065G0402473 12	CHIP 0.047UF 16V X7R
C106	065G0402473 12	CHIP 0.047UF 16V X7R
C105	065G0402473 12	CHIP 0.047UF 16V X7R
C101	065G0402473 12	CHIP 0.047UF 16V X7R
C111	065G0402509 31	CHIP 5PF 50V NPO
C108	065G0402509 31	CHIP 5PF 50V NPO
C104	065G0402509 31	CHIP 5PF 50V NPO
FB301	071G 56K121 M	CHIP BEAD
FB203	071G 56Z601	CHIP BEAD 600 OHM 0805
FB103	071G 59K190 B	19 OHM BEAD
FB102	071G 59K190 B	19 OHM BEAD
FB101	071G 59K190 B	19 OHM BEAD
D106	093G 60505	DIO SIG SM BAT54C(PHSE)R
D102	093G 64 33	DIO SIG SM BAV99 (PHSE)R
D103	093G 64 33	DIO SIG SM BAV99 (PHSE)R
D104	093G 64 33	DIO SIG SM BAV99 (PHSE)R
D105	093G 64 42 PP	BAV70 SOT-23
C227	093G 64 59 SU	ESD MLVS0603M04 0603
C226	093G 64 59 SU	ESD MLVS0603M04 0603
C225	093G 64 59 SU	ESD MLVS0603M04 0603
C224	093G 64 59 SU	ESD MLVS0603M04 0603
C223	093G 64 59 SU	ESD MLVS0603M04 0603
ZD106	093G 39S 34 T	UDZS5.6B
ZD105	093G 39S 34 T	UDZS5.6B

ZD104	093G 39S 34 T	UDZS5.6B
ZD103	093G 39S 34 T	UDZS5.6B
ZD102	093G 39S 34 T	UDZS5.6B
ZD101	093G 39S 34 T	UDZS5.6B
	715G2659 1	MAIN BOARD PCB
	KEPC7QD1	KEY BOARD
CN1	089G176J 8522	FFC CABLE
	Q52G6022 28	TAPE
C02	065G0603104 12	CER2 0603 X7R 16V 100N P
C01	065G0603104 12	CER2 0603 X7R 16V 100N P
SW03	077G 605 1 AL GP	SMD SWITCH
SW02	077G 605 1 AL GP	SMD SWITCH
SW01	077G 605 1 AL GP	SMD SWITCH
SW05	077G 605 1 AL GP	SMD SWITCH
SW04	077G 605 1 AL GP	SMD SWITCH
LED01	081G 14 12 KT	CHIP LED
D01	093G 64 59 SU	ESD MLVS0603M04 0603
	715G2718 1	KEY BOARD PCB
	PWPC721GD1	POWER BOARD
CN802	033G8020 2E F	CONNECTOR
CN801	033G8020 2E F	CONNECTOR
	040G 45762412B	CBPC LABEL
	044G3231 15571	EVA WASHER
IC903	056G 139 3A	IC PC123Y22FZ0F
R908	061G152M10458G	100K OHM 5% 2W
R914	061G152M478 64	0.47 OHM 5% 2W
C903	063G 10747410V	0.47UF 275VAC ARCO
C801	065G 3J1506ET	15PF 5% CC45SL 3KV TDK
C902	065G305M1022BP	Y2 1000PF M 250VAC Y5P
C901	065G305M1022BP	Y2 1000PF M 250VAC Y5P
C921	065G305M3322BP	3300PF 250VAC/400VAC
C907	067G 40Z10115K	CAP 105℃ 100UF M 450V
C922	067G215D4714KV	E.C 105℃ CAP 470UF M 25V ED SERIES
C802	067G215D4714KV	E.C 105℃ CAP 470UF M 25V ED SERIES
C918	067G215D6814KV	CAP 105℃ 680UF M 25V
C917	067G215D6814KV	CAP 105℃ 680UF M 25V
C940	067G215S1023KV	105℃ 1000UF M 16V
C939	067G215S1023KV	105℃ 1000UF M 16V
C915	067G215S4713KV	EC 105℃ CAP 470UF M 16V
L902	073G 174 65 H	LINE FILTER

T901	080GL17T 33 N	POWER X'FMR
T801	080GL17T 40 DN	X'FMR TK.2001U.101
CN901	087G 501 32 S	AC SOCKET
BD901	093G 50460 28	BRIDGE DIODE KBP208G LITEON
D905	093G3006 1 1	31DQ06FC3 NIHON INTER
CN902	095G8014 6D655	WIRE HARNESS
	705GQ757006	Q901 ASS'Y
Q901	057G 724 11	STP9NK65ZFP
	0M1G1730 8120	SCREW
HS3	Q90G6263 3	HEAT SINK
	705GQ761005	NR901 ASS'Y
NR901	061G 58080 WT	8 OHM NCT
	096G 29 10	H.S. TUBE
	705GQ793027	D906 ASS'Y
D906	093G 60294	DIODE MBRF10150CT 10A/150V ITO-220
	0M1G1730 8120	SCREW
HS2	Q90G6263 2	HEAT SINK
IC801	056G 368 14	IC SMPS KA7500CDTF SOIC-16
IC901	056G 379 76	IC LD7552BPS SOP-8
Q903	057G 417 4	PMBS3904/PHILIPS-SMT(04)
Q811	057G 417 4	PMBS3904/PHILIPS-SMT(04)
Q806	057G 417 4	PMBS3904/PHILIPS-SMT(04)
Q801	057G 417 4	PMBS3904/PHILIPS-SMT(04)
Q812	057G 417 6	PMBS3906/PHILIPS-SMT(06)
Q804	057G 417 6	PMBS3906/PHILIPS-SMT(06)
Q809	057G 759 2	RK7002
Q810	057G 759 2	RK7002
Q808	057G 760 4B	PDTA144WK SOT346
Q805	057G 760 5B	PDTC144WK SOT346
Q802	057G 763 14	AM9945N
R823	061G0603000	RST CHIPR 0 OHM +-5% 1/10W
R801	061G0603100 1F	RST CHIPR 1 KOHM +-1% 1/10W
R808	061G0603100 1F	RST CHIPR 1 KOHM +-1% 1/10W
R814	061G0603100 1F	RST CHIPR 1 KOHM +-1% 1/10W
R818	061G0603100 1F	RST CHIPR 1 KOHM +-1% 1/10W
R821	061G0603100 1F	RST CHIPR 1 KOHM +-1% 1/10W
R822	061G0603100 1F	RST CHIPR 1 KOHM +-1% 1/10W
R824	061G0603100 1F	RST CHIPR 1 KOHM +-1% 1/10W
R827	061G0603100 1F	RST CHIPR 1 KOHM +-1% 1/10W
R926	061G0603100 1F	RST CHIPR 1 KOHM +-1% 1/10W

R942	061G0603100 1F	RST CHIPR 1 KOHM +-1% 1/10W
R863	061G0603100 2F	RST CHIPR 10 KOHM +-1% 1/10W
R832	061G0603100 2F	RST CHIPR 10 KOHM +-1% 1/10W
R828	061G0603100 2F	RST CHIPR 10 KOHM +-1% 1/10W
R820	061G0603100 2F	RST CHIPR 10 KOHM +-1% 1/10W
R817	061G0603100 2F	RST CHIPR 10 KOHM +-1% 1/10W
R807	061G0603100 2F	RST CHIPR 10 KOHM +-1% 1/10W
R813	061G0603102	RST CHIP 1K 1/10W 5%
R835	061G0603105	RST CHIPR 1 MOHM +-5% 1/10W
R862	061G0603105	RST CHIPR 1 MOHM +-5% 1/10W
R803	061G0603106	RST CHIPR 10 MOHM +-5% 1/10W
R930	061G0603243 1F	RST CHIPR 2.43 KOHM +-1% 1/10W
R940	061G0603330 2F	RST CHIPR 33 KOHM +-1% 1/10W
R927	061G0603360 1F	RST CHIPR 3.6 KOHM +-1% 1/10W
R811	061G0603472	RST CHIPR 4.7KOHM +-5% 1/10W
R851	061G0603510 1F	RST CHIPR 5.1 KOHM +-1% 1/10W
R841	061G0603620 2F	RST CHIPR 62 KOHM +-1% 1/10W
R853	061G0603683	RST CHIPR 68 KOHM +-5% 1/10W
R802	061G0603910 2F	RST CHIP 91K 1/10W 1%
R831	061G0805100 1F	RST CHIPR 1KOHM +-1% 1/8W
R915	061G0805100 3F	RST CHIPR 100KOHM +-1% 1/8W
R804	061G0805101	RST CHIPR 100 OHM +-5% 1/8W
R943	061G0805102	RST CHIPR 1KOHM +-5% 1/8W
R925	061G0805102	RST CHIPR 1KOHM +-5% 1/8W
R826	061G0805102	RST CHIPR 1KOHM +-5% 1/8W
R938	061G0805103	10 KOHM 1/10W
R924	061G0805151	RST CHIPR 150 OHM +-5% 1/8W
R825	061G0805220	22&8 1/10W
R829	061G0805220	22&8 1/10W
R839	061G0805220	22&8 1/10W
R850	061G0805220	22&8 1/10W
R837	061G0805473	RST CHIPR 47 KOHM +-5% 1/8W
R810	061G0805510 2F	RST CHIPR 51 KOHM +-1% 1/8W
F801	061G1206000	RST CHIPR 0 OHM +-5% 1/4W
JR801	061G1206000	RST CHIPR 0 OHM +-5% 1/4W
JR901	061G1206000	RST CHIPR 0 OHM +-5% 1/4W
JR902	061G1206000	RST CHIPR 0 OHM +-5% 1/4W
R910	061G1206100	RST CHIP 10R 1/4W 5%
R918	061G1206101	100 1206
R919	061G1206101	100 1206

R920	061G1206101	100 1206
R935	061G1206101	100 1206
R961	061G1206101	100 1206
R962	061G1206101	100 1206
R946	061G1206102	RST CHIPR 1 KOHM +-5% 1/4W
R945	061G1206102	RST CHIPR 1 KOHM +-5% 1/4W
R944	061G1206102	RST CHIPR 1 KOHM +-5% 1/4W
R941	061G1206102	RST CHIPR 1 KOHM +-5% 1/4W
R912	061G1206221	RST CHIPR 220 OHM +-5% 1/4W
R932	061G1206304	300 KOHM 1/8W
R933	061G1206304	300 KOHM 1/8W
R904	061G1206304	300 KOHM 1/8W
R856	061G1206330	RST CHIPR 33 OHM +-5% 1/4W
R855	061G1206330	RST CHIPR 33 OHM +-5% 1/4W
R909	061G1206519	RST CHIPR 5.1 OHM +-5% 1/4W
R902	061G1206684	RST CHIPR 680 KOHM +-5% 1/4W
R901	061G1206684	RST CHIPR 680 KOHM +-5% 1/4W
R900	061G1206684	RST CHIPR 680 KOHM +-5% 1/4W
C842	065G0603103 32	0.01UF +-10% 50V X7R
C834	065G0603104 22	CHIP 0.1UF 25V X7R
C825	065G0603104 22	CHIP 0.1UF 25V X7R
C821	065G0603104 22	CHIP 0.1UF 25V X7R
C807	065G0603104 22	CHIP 0.1UF 25V X7R
C823	065G0603222 22	CHIP 2200PF 25V X7R
C819	065G0603222 22	CHIP 2200PF 25V X7R
C932	065G0805102 31	1000PF 50V NPO
C839	065G0805102 31	1000PF 50V NPO
C838	065G0805102 31	1000PF 50V NPO
C928	065G0805102 32	CHIP 1000P 50VX7R 0805
C930	065G0805104 32	CHIP 0.1U 50V X7R
C924	065G0805104 32	CHIP 0.1U 50V X7R
C916	065G0805104 32	CHIP 0.1U 50V X7R
C905	065G0805104 32	CHIP 0.1U 50V X7R
C824	065G0805104 32	CHIP 0.1U 50V X7R
C822	065G0805105 22	CHIP 1UF 25V X7R 0805
C820	065G080522131G	220PF 50V NPO 2%
C845	065G0805225 12	CHIP 2.2UF 16V X7R 0805
C909	065G0805471 21	CHIP 470PF 25V NPO
C929	065G1206102 72	CHIP 1000PF 500V X7R
C912	065G1206102 72	CHIP 1000PF 500V X7R

D801	093G 64 33	DIO SIG SM BAV99 (PHSE)R
D802	093G 64 33	DIO SIG SM BAV99 (PHSE)R
D817	093G 64 44 S	LL4148WP
D903	093G 64 44 S	LL4148WP
D813	093G 64 44 S	LL4148WP
D805	093G 64 44 S	LL4148WP
D806	093G 64 44 S	LL4148WP
D807	093G 64 44 S	LL4148WP
D812	093G 64 44 S	LL4148WP
D814	093G 64 44 S	LL4148WP
D916	093G 64 44 S	LL4148WP
D915	093G 64 44 S	LL4148WP
ZD801	093G 39S 10 T	RLZ6.8B BY ROHM
ZD906	093G 39S 20 T	RLZ22B LLDS
ZD922	093G 39S 25 T	RLZ5.1B LLDS
ZD921	093G 39S 40 T	RLZ 13B LLDS
ZD902	093G 39S 40 T	RLZ 13B LLDS
ZD905	093G 39S 44 T	RLZ18B LLDS
CN901	006G 31500	EYELET
T801	006G 31502	1.5MM RIVET
Q901	006G 31502	1.5MM RIVET
T901	006G 31502	1.5MM RIVET
IC904	056G 158 10 T	IC AZ431AZ-AE1 TO-92 BY AAC
C938	065G 1K152 1T	1.5NF/1KV Z5F+-10%
C906	065G 2K152 1T6052	1.5NF/2KV Y5P +-10%
C908	067G215Y2207KT	CAP 105℃ 22UF M 50V KINGNICHI
FB801	071G 55 9 T	FERRITE BEAD
FB901	071G 55 29	FERRITE BEAD
F901	084G 55 7W	FUSE 3.15A 250V WICKMANN
D900	093G 6026T52T	RECTIFIER DIODE FR107
D901	093G 6038P52T	PS102R
	715G2545 1 2	POWER BOARD PCB
	Q52G6025 13114	INSULATE SHEET
HS5	Q85G0002 1	SHIELD_MAIN
L901	S73G17476V	LINE FILTER
	Q01G6019 2	SCREW
	Q23G3178700 8A	LOGO
	Q33G0136 SN 1L	BUTTON FUNC
	Q33G0137 SNA1L	REAR LOGO
	Q33G0138 1 1L	LENS POWER

	Q34G0184 SNA1B 30	BEZEL L17W-7DELL2
	Q34G0185 VH 1B 30	REAR COVER(17)
	Q37G0054 1	HINGE
	Q40G 17N70016A	RATING LABEL
	Q41G780070090A	TECH SHEET
	Q41G780070099A	APCC_CCC_JP PIG
	Q41G7800700A05	SE178WFP QSG
	Q44G7066 1	EPS
	Q44G7066 2	EPS
	Q44G7066 3	EPS
	Q44G7066 4	EPS
	Q44G7066700 1A	CARTON
	Q44GSLIP10046A	PLASTIC SLIPSHEET
	Q45G 88606 8 R	PE BAG FOR BASE
	Q45G 88609 60 R	EPE BAG FOR MONITOR
	Q52G 1185 86	BIG TAPE FOR DELL CARTON
	Q52G6020 46	PROTECT FILM
	Q70G1700700 9B	CD MANUAL
	Q85G0051 1	INVERTER SHIELD
	S89G179T30N501	LVDS ASS'Y
	089F80002153AG	1.0*30*3-215-3-0.65*0.05
	033F303FH10BK3	F1010HA-30P-BK
	033F303FJSHK30	1.0S-19-30A

14. Different Parts List

Diversity of T77GMRHJYWDRNN compared with T77GMRHFYWDRNN		
Location	**Part No.**	**Description**
E089A	089G401A18NHRA	Power cord
	Q07G 1 5D36	Wooden pallet
	Q40G 17N70017A	Rating label
	Q44G9003210	Corner paper

Diversity of T77GMRHKYWDRNN compared with T77GMRHFYWDRNN		
Location	**Part No.**	**Description**
E089A	089G402A18NISD	POWER CORD
	Q40G0001700 4A	DELL CARTON LABEL
	Q41G780070098A	PIG FOR DAO

Diversity of T77GMRHLYWDRNN compared with T77GMRHFYWDRNN		
Location	**Part No.**	**Description**
	089G412A18NIS3	POWER CORD WALL-OUT FOR AUSTRA

Diversity of T77GMRHMYWDRNN compared with T77GMRHFYWDRNN		
Location	**Part No.**	**Description**
	Q07G 1 5D36	WOODEN PALLET
	Q41G780070081A	DELL ROHS CARD
	Q44G7066 1 B	EPS
	Q44G7066 2 B	EPS
	Q44G7066700 2A	CARTON
	Q44G9003210	CORNER PAPER

Diversity of T77GMRHBYWDRNC compared with T77GMRHFYWDRNN		
Location	**Part No.**	**Description**
	044G9003135	CORNER PAPER
	750GLG71W3B11D000D	PANEL LM171WX3-TLB1 KR LPL
	Q40G0001700 4A	DELL CARTON LABEL
	Q41G7800700A01	EMEA PIG

Diversity of T77GMRHBYWDRNN compared with T77GMRHFYWDRNN		
Location	**Part No.**	**Description**
	044G9003135	CORNER PAPER
	Q40G0001700 4A	DELL CARTON LABEL
	Q41G7800700A01	EMEA PIG

Diversity of T77GMRHFYWDRNC compared with T77GMRHFYWDRNN		
Location	**Part No.**	**Description**
	750GLG71W3B11D000D	PANEL LM171WX3-TLB1 KR LPL

Diversity of T77GMRHJYWDRNC compared with T77GMRHFYWDRNN		
Location	**Part No.**	**Description**
E089A	089G401A18NHRA	POWER CORD
	750GLG71W3B11D000D	PANEL LM171WX3-TLB1 KR LPL
	Q40G 17N70017A	RATING LABEL
	Q44G9003210	CORNER PAPER

Diversity of T77GMRHKYWDRNC compared with T77GMRHFYWDRNN		
Location	**Part No.**	**Description**
E089A	089G402A18NISD	POWER CORD
	750GLG71W3B11D000D	PANEL LM171WX3-TLB1 KR LPL
	Q40G0001700 4A	DELL CARTON LABEL
	Q41G780070098A	PIG FOR DAO

Diversity of T77GMRHMYWDLNC compared with T77GMRHFYWDRNN		
Location	**Part No.**	**Description**
	750GLG71W3B11D000D	PANEL LM171WX3-TLB1 KR LPL

Diversity of T77HMRHKYWDRNC compared with T77GMRHFYWDRNN		
Location	**Part No.**	**Description**
E089A	089G402A18NISD	POWER CORD
	705GQ715012	SE178WFPC DELL MAIN FRAME ASS'Y
	Q15G0212 1S	MAINFRAME
	750GLH70GWC12D000D	PANEL HSD170MGW1-C00 NJ HSD
	CBPC7HMRDRQ1	MAIN BOARD
	PWPC721HD1	POWER BOARD
CN802	033G8020 2F U	CONN.2P DIP R/A
CN801	033G8020 2F U	CONN.2P DIP R/A
	Q40G0001700 4A	DELL CARTON LABEL

	Q41G780070098A	PIG FOR DAO

Diversity of T77HMRHKYWDRNN compared with T77GMRHFYWDRNN		
Location	**Part No.**	**Description**
E089A	089G402A18NISD	POWER CORD
	705GQ715012	SE178WFPC DELL MAIN FRAME ASS'Y
	Q15G0212 1S	MAINFRAME
	750GLH70GWC12Z000D	PANEL HSD170MGW1-C00 ZBD NJ HSD
	CBPC7HMRDRQ1	MAIN BOARD
	PWPC721HD1	POWER BOARD
CN802	033G8020 2F U	CONN.2P DIP R/A
CN801	033G8020 2F U	CONN.2P DIP R/A
	Q40G0001700 4A	DELL CARTON LABEL
	Q41G780070098A	PIG FOR DAO

Diversity of T77HMRHFYWDRNC compared with T77GMRHFYWDRNN		
Location	**Part No.**	**Description**
	705GQ715012	SE178WFPC DELL MAIN FRAME ASS'Y
	Q15G0212 1S	MAINFRAME
	750GLH70GWC12D000D	PANEL HSD170MGW1-C00 NJ HSD
	CBPC7HMRDRQ1	MAIN BOARD
	PWPC721HD1	POWER BOARD
CN802	033G8020 2F U	CONN.2P DIP R/A
CN801	033G8020 2F U	CONN.2P DIP R/A

Diversity of T77HMRHJYWDRNC compared with T77GMRHFYWDRNN		
Location	**Part No.**	**Description**
E089A	089G401A18NHRA	POWER CORD
	705GQ715012	SE178WFPC DELL MAIN FRAME ASS'Y
	Q15G0212 1S	MAINFRAME
	750GLH70GWC12D000D	PANEL HSD170MGW1-C00 NJ HSD
	CBPC7HMRDRQ1	MAIN BOARD
	PWPC721HD1	POWER BOARD
CN802	033G8020 2F U	CONN.2P DIP R/A
CN801	033G8020 2F U	CONN.2P DIP R/A
	Q40G 17N70017A	RATING LABEL
	Q44G9003210	CORNER PAPER

Diversity of T77HMRHLYWDRNC compared with T77GMRHFYWDRNN		
Location	**Part No.**	**Description**
E089A	089G412A18NIS3	POWER CORD WALL-OUT FOR AUSTRA 32E181805
	705GQ715012	SE178WFPC DELL MAIN FRAME ASS'Y
	Q15G0212 1S	MAINFRAME
	750GLH70GWC12D000D	PANEL HSD170MGW1-C00 NJ HSD
	CBPC7HMRDRQ1	MAIN BOARD
	PWPC721HD1	POWER BOARD
CN802	033G8020 2F U	CONN.2P DIP R/A
CN801	033G8020 2F U	CONN.2P DIP R/A

Diversity of T77HMRHMYWDLNC compared with T77GMRHFYWDRNN		
Location	**Part No.**	**Description**
	705GQ715012	SE178WFPC DELL MAIN FRAME ASS'Y
	Q15G0212 1S	MAINFRAME
	750GLH70GWC12D000D	PANEL HSD170MGW1-C00 NJ HSD
	CBPC7HMRDRQ1	MAIN BOARD
	PWPC721HD1	POWER BOARD
CN802	033G8020 2F U	CONN.2P DIP R/A
CN801	033G8020 2F U	CONN.2P DIP R/A

Diversity of T77HMRHMYWDRNC compared with T77GMRHFYWDRNN		
Location	**Part No.**	**Description**
	705GQ715012	SE178WFPC DELL MAIN FRAME ASS'Y
	Q15G0212 1S	MAINFRAME
	750GLH70GWC12D000D	PANEL HSD170MGW1-C00 NJ HSD
	CBPC7HMRDRQ1	MAIN BOARD
	PWPC721HD1	POWER BOARD
CN802	033G8020 2F U	CONN.2P DIP R/A
CN801	033G8020 2F U	CONN.2P DIP R/A
	Q07G 1 5D36	WOODEN PALLET
	Q44G7066 1 B	EPS
	Q44G7066 2 B	EPS
	Q44G7066700 2A	CARTON
	Q44G9003210	CORNER PAPER

Diversity of T77HMRHBYWDRNC compared with T77GMRHFYWDRNN		
Location	**Part No.**	**Description**
	044G9003135	CORNER PAPER
	705GQ715012	SE178WFPC DELL MAIN FRAME ASS'Y
	Q15G0212 1S	MAINFRAME
	750GLH70GWC12D000D	PANEL HSD170MGW1-C00 NJ HSD
	CBPC7HMRDRQ1	MAIN BOARD
CN201	033G8019 8C JH	WAFER
	PWPC721HD1	POWER BOARD
CN802	033G8020 2F U	CONN.2P DIP R/A
CN801	033G8020 2F U	CONN.2P DIP R/A
C801	065G 6J1506ET	15PF 5% SL 6KV
CN902	095G8014 6X655	WIRE HARNESS
	Q52G6025 13143	INSULATE SHEET
	Q41G7800700A01	EMEA PIG
	Q52G 1185 91	BIG TAPE FOR DELL CARTON
	Q70G1700700 9C	CD MANUAL
	Q40G0001700 4A	DELL CARTON LABEL

Diversity of T77GMRHFYWDMNC compared with T77GMRHFYWDRNN		
Location	**Part No.**	**Description**
	015G8146 1	KEVSINGTON BRACKET
	045G 77501	BARCODE RIBBON
E750L	750GLG71W3B21D000D	PANEL LM171WX3-TLB2 KR LPL
D104	093G 64 33	DIO SIG SM BAV99 (PHSE)R
D103	093G 64 33	DIO SIG SM BAV99 (PHSE)R
D102	093G 64 33	DIO SIG SM BAV99 (PHSE)R
	PWPC721HD1	POWER BOARD G2545-2-2-X-1-071226
CN802	033G8020 2F U	CONNECTOR 2P DIP R/A
CN801	033G8020 2F U	CONNECTOR 2P DIP R/A
IC903	056G 139 3A	IC PC123Y22FZ0F
C922	067G 515471 4C	EC 470uF 25V GL 10x13mm
L903	073G 253191 L	CHOKE COIL 1.1uH CC-007802
L904	073G 253191 L	CHOKE COIL 1.1uH CC-007802
T801	080GL17T 40 H	XFMR INVERTER DADON
T801	080GL17T 40 DN	X'FMR TK.2001U.101
BD901	093G 50460502	KBP206G
CN902	095G8014 6X655	WIRE HARNESS
	051G 200 1	OIL FOR DISAPPEAR

Q901	057G 667 30	2SK2645
	051G 200 1	OIL FOR DISAPPEAR
Q801	057G 417 12 T	KEC 2N3904S-RTK/PS
Q806	057G 417 12 T	KEC 2N3904S-RTK/PS
Q811	057G 417 12 T	KEC 2N3904S-RTK/PS
Q903	057G 417 12 T	KEC 2N3904S-RTK/PS
Q812	057G 417 13 T	KEC 2N3906S-RTK/PS
Q804	057G 417 13 T	KEC 2N3906S-RTK/PS
Q802	057G 763 6	AO4828L
D802	093G 6433P	BAV99
D801	093G 6433P	BAV99
D916/ D915	093G 64S901 T	DIODE LS4148
D903/ D817	093G 64S901 T	DIODE LS4148
D814/ D806	093G 64S901 T	DIODE LS4148
D805/ D813	093G 64S901 T	DIODE LS4148
D807/ D812	093G 64S901 T	DIODE LS4148
IC904	056G 158 12	KIA431A-AT/P TO-92
L902	S73G17465V	LINE FILTER ASS'Y
	034FPF20P01	BOBBIN
L902	S73G17465VW	LINE FILTER ASS'Y
T901	S80GL17T33V	TRANSFORMER ASS'Y
M023	Q23G3178700 8A GM	LOGO
	Q52G 1185 76	REWORK TAPE FOR DELL CARTON
	044F3231 167C1	SEKISUI5760#W=30
	044F3231 167C2	SEKISUI5760#W=25
M03701	SQ37G00541	HINGE ASS'Y
	002F0604100 00	NUTS
	004F061515P 00	WASHER
	004F0612051 00	WASHER
	004F0612052 00	METAL WASHER
	004F061210M 00	METAL WASHERS12.0*6.03*4.70H
	004F061210T 00	METAL WASHERS12.0*8.00*1.6H
	0Q1F 130 6120	SCREW
	0M1F 140 6125	SCREW
	0M1F2535 5128	HEAD SCREW
	027F0605 00	RING
	0Q1F 130 5120	SCREW
	015F0054110	ACTIVE BRACKET
	015F0054120	VESA PLATE
	015F0054130	BASE PLATE

	012F1215 00	MAT
	019F20173L4	SPRING
	019F20173R4	SPRING
	028F0625080	SHAFT
	020F0054120	DIECASTING
	034F0186 VH 1B	VESA PLASTIC
	034F0187 VH 1B	RISER FRONT PLASTIC
	034F0188 VH 1B	RISER BACK PLASTIC
	034F0189 VH 1B	BASE PLASTIC
	051F 100510 00	GLEUS
	0M1F 140 8125	SCREW
	012F0408040 00	WASHER

Diversity of T77GMRHMPWDMNC compared with T77GMRHFYWDRNN		
Location	**Part No.**	**Description**
	023G3178700 3A	LOGO
	041G 68623 1A	CERTIFICATED CARD
E08902	089G 728CAA 2D	SIGNAL CABLE
	0M1G1730 6120	SCREW,42-D020523
	705GQ734168	MAIN FRAME ASS'Y(17")
	Q15G0212 2	MAINFRAME
E750L	750GLG71W3A31D000D	PANEL LM171WX3-TLA3 KR LPL
	CBPC7GMRDLQ1	MAIN BOARD G2659-1-DEL-X-1-070821
R216	061G0402621	RST CHIP 620R 1/16W 5%
C227	065G0603102 32	1000PF +-10% 50V X7R
C226	065G0603102 32	1000PF +-10% 50V X7R
C225	065G0603102 32	1000PF +-10% 50V X7R
C224	065G0603102 32	1000PF +-10% 50V X7R
C223	065G0603102 32	1000PF +-10% 50V X7R
D102	093G 64 33	DIO SIG SM BAV99 (PHSE)R
D103	093G 64 33	DIO SIG SM BAV99 (PHSE)R
D104	093G 64 33	DIO SIG SM BAV99 (PHSE)R
	KEPC7QD2	KEY BOARD
	052G6022 20	SMALL TAPE
	055G 23524	WELDING FLUX WITHOUT PB
SW1	077G 500 4 CJ	DOME SWITCH 4PCS ARRAY
CN1	089G176J 8521	FFC CABLE
LED01	081G 14501 GP	LED GPTD1210YGC3-HB GUANGPU
	715G1564 1 4	KEY BOARD PCB
	PWPC721HD1	POWER BOARD G2545-2-2-X-1-071226

CN802	033G8020 2F U	CONNECTOR 2P DIP R/A
CN801	033G8020 2F U	CONNECTOR 2P DIP R/A
	Q33G0122 SNA1L	BUTTON FUNC
	Q34G0171 VH 1B	BEZEL L17W-7DELL
	Q34G0172 VH 1B 30	REAR COVER(17)
M03701	Q37G0053 1	HINGE ASS'Y
	Q40G 17N70013B	RATING LABEL
	Q41G7800700B04	QSG
	Q44G7063 1	EPS
	Q44G7063 2	EPS
	Q44G7063 3EPE	EPE
	Q44G7063700 2B	17"LCD CARTON
	Q44G9003210	CORNER PAPER
	Q45G 88607DE8 R	PE BAG FOR MONITOR
	Q50G 505 17	BAND
	Q70G1700700 8E	CD MANUAL

Diversity of T77GMRHMYWDMNC compared with T77GMRHFYWDRNN		
Location	**Part No.**	**Description**
	041G 68623 1A	CERTIFICATED CARD
E08902	089G 728CAA 2D	SIGNAL CABLE
E750L	750GLG71W3B21D000D	PANEL LM171WX3-TLB2 KR LPL
	PWPC721HD1	POWER BOARD G2545-2-2-X-1-071226
CN802	033G8020 2F U	CONNECTOR 2P DIP R/A
CN801	033G8020 2F U	CONNECTOR 2P DIP R/A
	Q07G 1 5D36	WOODEN PALLET
	Q44G7066700 2B	17"LCD CARTON
	Q44G9003210	CORNER PAPER

Diversity of T77GMRHMYWDNNC compared with T77GMRHFYWDRNN		
Location	**Part No.**	**Description**
E750L	750GLG71W3B21D000D	PANEL LM171WX3-TLB2 KR LPL
	PWPC721HD1	POWER BOARD G2545-2-2-X-1-071226
CN802	033G8020 2F U	CONNECTOR 2P DIP R/A
CN801	033G8020 2F U	CONNECTOR 2P DIP R/A