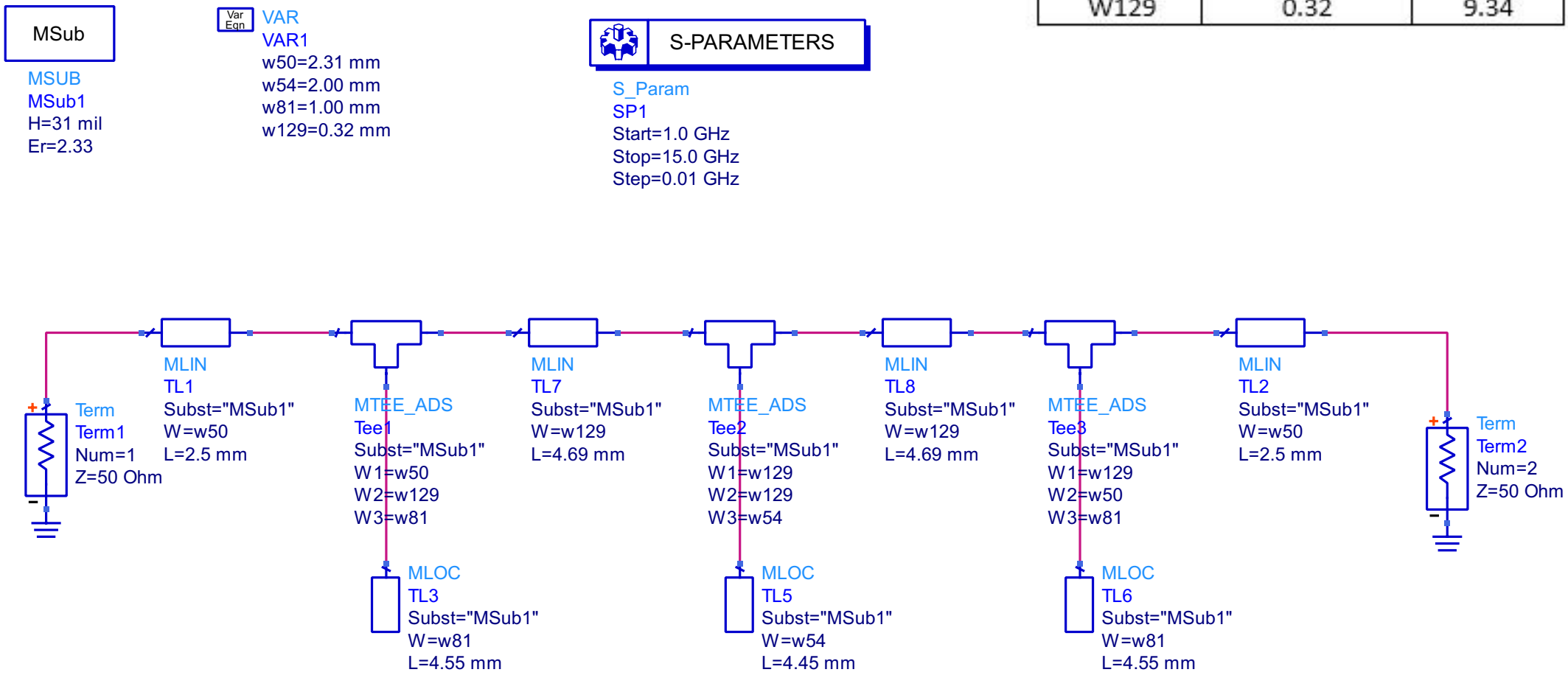	W (in mm)	L (in mm)
W50	2.31	8.87
W54	2.05	8.90
W81	1.04	9.11
W129	0.32	9.34