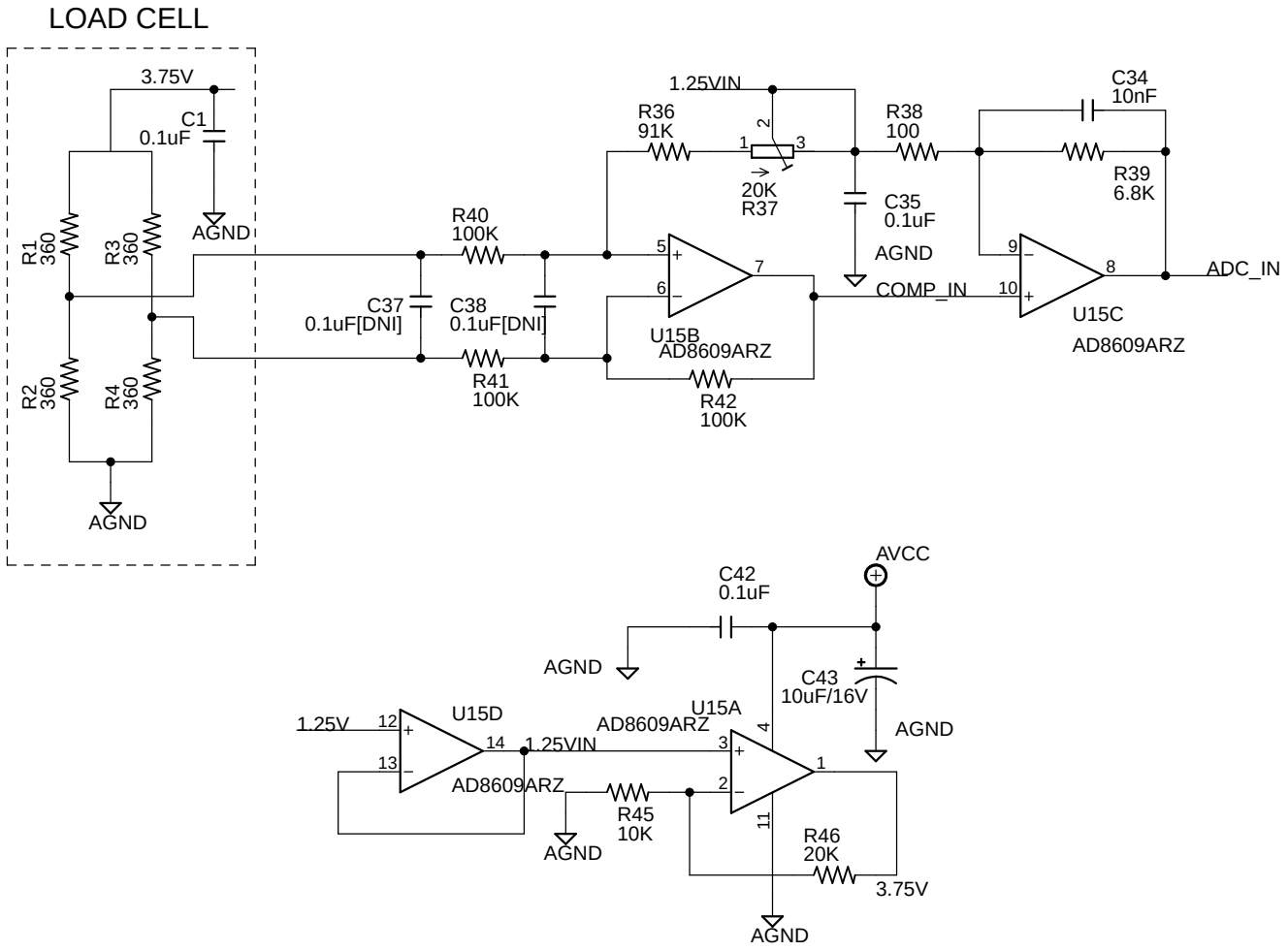


| | |
|---|---|
| Tabtest 1B | |
| SIZE:A4 | DOC No: |
| 27-06-2012 04:59:10 PM | |
| SHEET:1/1 | REV 1C |